Presentation switcher

MSD-701 / 702

<Command Reference Guide>

Ver.1.0.1

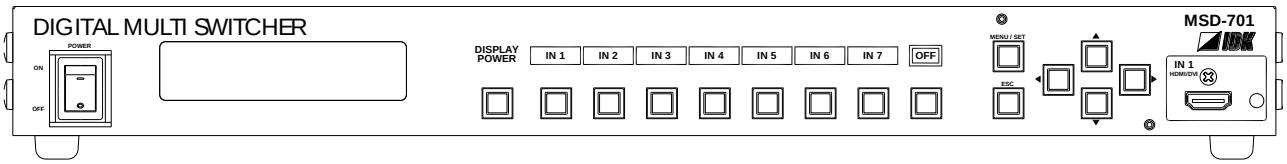

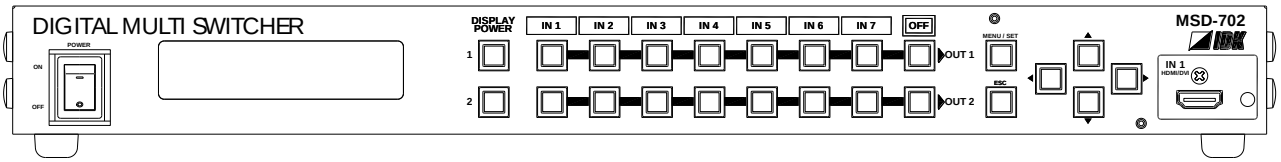

- Thank you for choosing our product.
- To ensure the best performance of this product, please read this Command Guide and Users Guide fully and carefully before using your product and keep this manual beside the product.

IDK Corporation

Trademarks

- The terms HDMI and HDMI High-Definition Multimedia Interface, and the HDMI Logo are trademarks or registered trademarks of HDMI Licensing, LLC in the United States and other countries.
- PJLink is a trademark in JAPAN, the United States, and other countries/regions.
- HDBaseT™ and the HDBaseT Alliance Logo are trademarks of the HDBaseT Alliance.
- All other company and product names mentioned in this manual are either registered trademarks or trademarks of their respective owners. In this manual, the “®” or “™” marks may not be specified.

Before reading this manual

- Some of the contents in this command guide such as appearance diagrams, menu operations, communication commands, and so on may differ from your MSD depending on the version.
- This command guide is subject to change without notice. You can download the latest version from IDK's website at: http://www.idk.co.jp/en/index.html

The reference manual for the MSD-501/502 consists of the following two volumes:

■ Users guide:
Provides explanations and procedures for operations, installation, connections among devices, I/O adjustment and settings.

■ Command guide (this document): Please download this guide from the website above.
Provides explanations and procedures for external control using RS-232C communication and LAN communications.

Table of Contents

1 About this guide

This guide contains information of communication commands that control the MSD via RS-232C or LAN communication.

■ **You can perform the following operations using communication commands**

- Switching channels.
- Setting I/O, audio, and EDID.
- Setting sending of external control command.
- Setting preset memory.
- Setting and displaying bitmaps and such.

2 Setup and specification of communication

2.1 RS-232C communication

2.1.1 Setup RS-232C communication

(1) Connect the MSD and the control device via an RS-232C cable.

(2) Set the RS-232C communication as follows:

- RS-232C communication: baud rate, data bit length, parity check, and stop bit
- Operation mode of RS-232C communication: “RECEIVER”
- RS-232C transmission between control devices: “OFF”

【Reference: User’s Guide】

(3) For the control device, set the same values in the same way as RS-232C communication (baud rate, data bit length, parity check, and stop bit) in step (2) above.

(4) Send a communication command from the control device to the MSD in order to check the control status of the MSD.

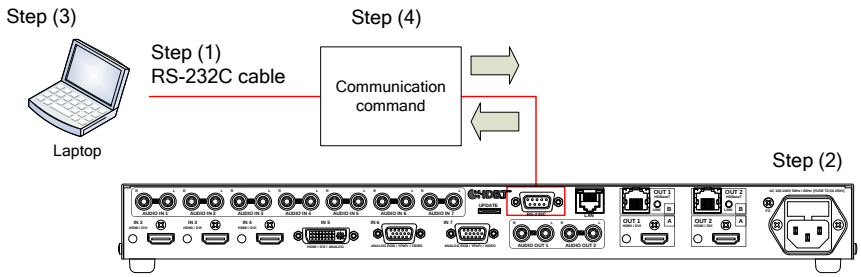

[Fig. 2.1] Setting RS-232C communication

■ **Operation example of RS-232C communication**

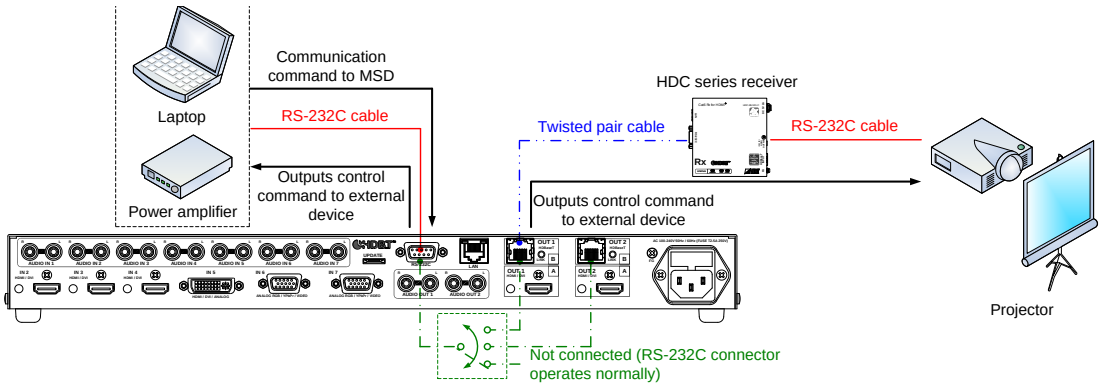

[Fig. 2.2] Sample application of RS-232C communication

2.1.2 RS-232C connector

RS-232C pin assignments

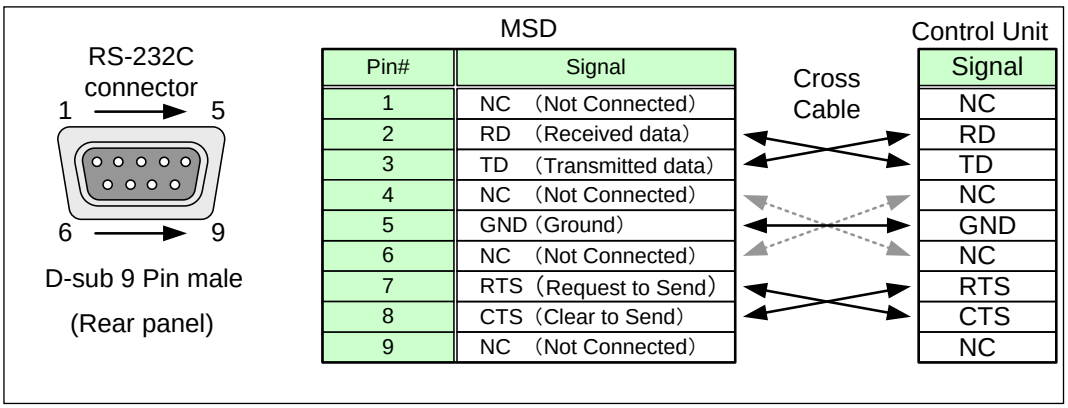

Fig. 2.3] RS-232C connector

2.1.3 Specification of RS-232C communication

[Table 2.1] RS-232C specification

Compliant standard	RS-232C
Baud rate	4800, 9600, 19200, 38400 [bps]
Data bit	7, 8 [bit]
Parity check	None, even, odd
Stop bit	1, 2 [bit]
X parameter	Invalid
Flow control	None
Delimiter	CR LF (Carriage return and line feed, 0D and 0A in hex)
Communication method	Full duplex

2.2 LAN communication

2.2.1 Setup LAN communication

(1) Connect the MSD and the control device via a LAN cable.
(2) Set up RS-232C communication as follows:
- Set IP address and subnet mask
- Operation mode of LAN communication: “RECEIVER”
- TCP pot number: 23, 1100, 6000 to 6999

【Reference: User’s Guide】

(3) Establish the connection from the control device to the IP address and TCP port that are set to the MSD in step (2) above.
(4) Send a communication command from the control device to the MSD in order to check the control status of the MSD.

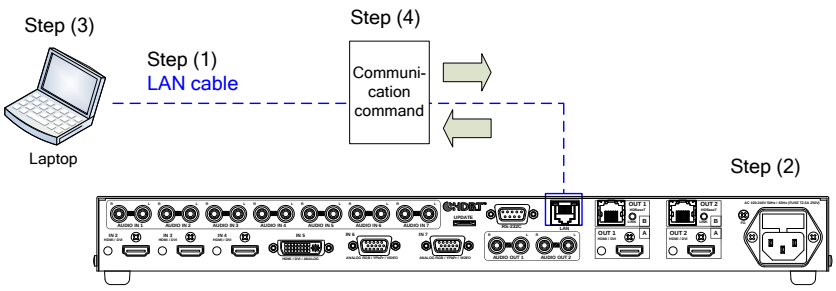

[Fig. 2.4] Control via LAN communication

■ Sample application of LAN communication

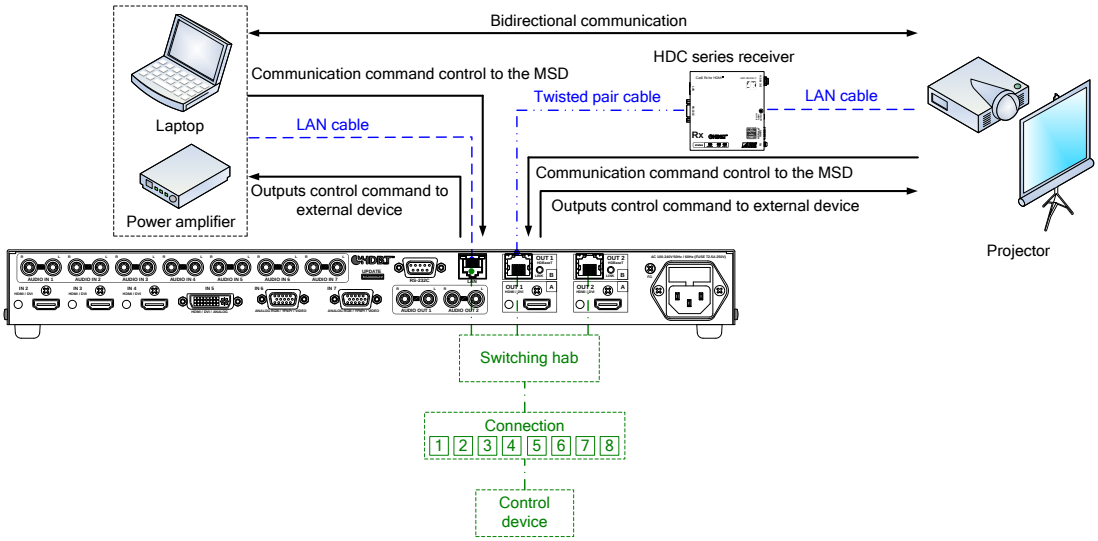

[Fig. 2.5] Sample application of LAN communication

2.2.2 LAN connector

LAN connector pin assignments:

It supports Auto MDI/MDI-X, which distinguishes/switches straight and cross cables automatically.

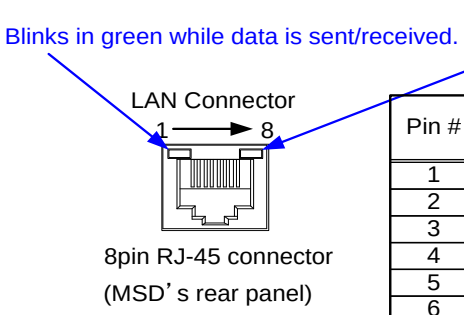

Pin #	Signal Name	
	MDI	MDI-X
1	TX+: Transmitted Data+	RX+: Received Data+
2	TX-: Transmitted Data-	RX-: Received Data-
3	RX+: Received Data+	TX+: Transmitted Data+
4	N.C: Not connected	N.C: Not connected
5	N.C: Not connected	N.C: Not connected
6	RX-: Received Data-	TX-: Transmitted Data-
7	N.C: Not connected	N.C: Not connected
8	N.C: Not connected	N.C: Not connected

[Fig. 2.6] LAN connector

2.2.3 Specification of LAN communication

[Table 2.2] Specification of LAN communication

Physical layer	10BASE-T (IEEE802.3i)/100Base-TX (IEEE802.3u)
Network layer	ARP, IP, ICMP
Transport layer	TCP Port used for command control: 23, 1100, 6000 to 6999 Port used for WEB browser control (HTTP): 80, 5000 to 5999
Application layer	HTTP, TELNET

Note: Up to 8 connections can be used simultaneously.

2.2.4 The number of TCP-IP connections

The MSD series can connect up to eight connections (eight ports) simultaneously. If the MSD is controlled from nine or more PCs, they may not be connected to the MSD normally, since the number of connections that can be used is limited.

If you use nine connections or more, execute TCP-IP connection/close every time the communication command is sent or received from the software of user's side. By doing so, MSD's ports are occupied or released so that nine or more connections can be connected logically.

[Table 2.3] Increasing connections

Your PC software		MSD
TCP-IP connection	→	**(Occupied by 1 port)**
Send command (@xxx)	→	
	←	Send back command (@xxx)
TCP-IP close	→	**(Release 1 port)**

Note: If any command is not sent from the PC side to the MSD for 30 seconds, the MSD disconnects the connection to avoid the limitation problem on the number of connections. As a result, connection needs to be established again from the PC side after the current connection of the PC is disconnected. (Since the number of ports in the MDS is eight, ports are occupied permanently if the PC is turned off while connections are valid. To prevent this, the MSD disconnects connections if no communication command is sent from the PC side.)

3 Command

3.1 Command outline

A command consists of “@” (“40” in hexadecimal), 3 one-byte alphabetical characters (upper and lower cases), and parameters (one-byte numbers*). For some commands, several parameters can be specified or no parameter is required. Processing is executed by sending a delimiter at the end of the command.

Example: @SPM,2 ⏎

“,”(a comma, “2C” in hexadecimal) is indicated between a command and parameter and between two parameters.
⏎: delimiter CR LF (return+line feed, “0D” and “0A” in hex)

■ **If there is an error:**
An error command is returned if an undefined command or wrong parameter is included.
Example: @SOT,1
@ERR,1

■ **Using as HELP:**
If only delimiter is sent, command list as the help command is returned.
Example:⏎

```
--------------- HELP (1/13) ---------------

(CHANNEL SELECT Command)

@SSW / @GSW : Set/Get Input Channel

@SSV / @GSV : Set/Get Video Input Channel

@SSA / @GSA : Set/Get Audio Input Channel
```

3.2 Command list

■ **Error status**

Command	Function
@ERR	Error status

■ **Power switch**

Command	Function
@GDS/@SDS	Sink device power switch

■ **Input channels**

Command	Function
@GSW / @SSW	Switching video and audio channel simultaneously@GSV / @SSV
@GSV / @SSV	Switching video channel
@GSA / @SSA	Switching audio channel

■ **Position, size, and masking**

Command	Function
@GOT / @SOT	Output resolution
@GTD	Actual output resolution
@GUM / @SUM	Aspect ratio of sink device
@GAP / @SAP	Aspect ratio
@GAR / @SAR	Aspect ratio restoration
@GOV / @SOV	Overscan
@GNP / @SNP	Input position
@GNS / @SNS	Input size
@GNM / @SNM	Input masking
@IAS	Input automatic sizing
@GOP / @SOP	Output position
@GOS / @SOS	Output size
@GOM / @SOM	Output masking
@OAS	Output automatic sizing
@GBC / @SBC	Background color
@GTP / @STP	Test pattern

■ **Image quality**

Command	Function
@GFL / @SFL	Sharpness
@GBR / @SBR	Input brightness
@GCO / @SCO	Input contrast
@GHU / @SHU	Hue
@GST / @SST	Saturation
@GSU / @SSU	Black level
@IDC	Input default color
@GOB / @SOB	Output brightness
@GOC / @SOC	Output contrast
@ODC	Output default color

■ **Input settings**

Command	Function
@GDT / @SDT	No-signal-input monitoring
@GHE / @SHE	HDCP input enabled/disabled
@GIQ / @SIQ	Input equalizer
@GAI / @SAI	Analog input type
@GID / @SID	Automatic detection of input video interruption
@GIN / @SIN	Signal selection of DVI input connector
@GAU / @SAU	Priority of input channel automatic switching
@GMT / @SMT	Masking time after automatic switching

■ **Input timing**

Command	Function
@AIS / @AIT	Automatic measurement
@GHT / @SHT	The total number of horizontal dots
@GHS / @SHS	Horizontal start position
@GHD / @SHD	Horizontal display period
@GVS / @SVS	Vertical start position
@GVD / @SVD	Vertical display period
@GIS / @SIS	Automatic measurement of start position
@GSM / @SSM	Automatic measurement when unregistered signals are input
@RTT	Loading device data
@STT	Registering device data
@GTK / @STK	Tracking

■ Output settings

Command	Function
@GEQ / @SEQ	Output equalizer
@GDM / @SDM	Output mode
@GUY / @SUY	Synchronous signal output when no video signals are input
@GBO / @SBO	Output video when no video signals are input
@GFF / @SFF	Video switching effect
@GFT / @SFT	Video switching time
@GWC / @SWC	Wipe color
@GVO / @SVO	Video output connector
@GEN / @SEN	HDCP output
@GHR / @SHR	The number of HDCP retries
@GDC / @SDC	Deep Color
@GCE / @SCE	CEC connection
@HAU	HDCP re-authorization

■ Audio

Command	Function
@GSL / @SSL	Audio output level
@SOL	Relative value of audio output level
@GOL	Limit status of audio output level
@GAM / @SAM	Audio output mute
@GAS / @SAS	Selecting audio input
@GSD	Selecting actual audio input
@GSO / @SSO	Audio input level
@SIL	Relative value of audio input level
@GIL	Limit status of audio input level
@GLO / @SLO	Output lip sync
@GLY / @SLY	Input lip sync
@GSF / @SSF	Sampling frequency
@GFD	Actual sampling frequency
@GDO / @SDO	Audio output connector
@GAO / @SAO	Digital audio output connector
@GMD / @SMD	Multi channel audio output
@GAT / @SAT	Test tone

■ **EDID**

Command	Function
@GED / @SED	EDID data
@GVF / @SVF	Input resolution for PC
@GHF / @SHF	Input resolution for AV devices
@GDI / @SDI	Deep Color input
@GAF / @SAF	Audio format
@GSP / @SSP	The number of speakers
@RME	Copying EDID

■ **RS-232C communication**

Command	Function
@GCT / @SCT	RS-232C communication
@GCF / @SCF	RS-232C communication mode
@GCD / @SCD	RS-232C transmission between control devices

■ **LAN communication**

Command	Function
@GIP / @SIP	IP address
@GSB / @SSB	Subnet mask
@GGW / @SGW	Gateway address
@GLF / @SLF	LAN communication mode
@GLP / @SLP	TCP port number
@GMC	MAC

■ **Control commands**

Command	Function
@EXC	Executing control command
@GEC / @SEC	Getting control command (Communication command control)
@GEC / @SEC	Control command (Displaying received data)
@GEC / @SEC	Control command (CEC control)
@GRC / @SRC	Reply command
@GCC / @SCC	Control command link
@GIT / @SIT	Ineffective time during control command execution
@DEC	Initializing registered command and association
@GTF / @STF	Getting flashing time of sink device power switch

■ **Preset memory**

Command	Function
@RCM	Loading cross point memory
@SCM / @SEM	Saving channels to cross point memory
@GCM / @ECM	Editing cross point memory
@RCV	Loading cross point memory (setting video channel)
@SCV / @SEV	Saving cross point memory (Setting video channel)
@GCV / @ECV	Editing cross point memory (Setting video channel)
@RCA	Loading audio channel setting from cross point memory
@SCA / @SEA	Saving cross point memory (Setting audio channel)
@GCA / @ECA	Editing cross point memory (Setting audio channel)
@RPM / @SPM	Saving all settings
@GMU / @SMU	Startup settings

■ **Bitmap**

Command	Function
@GBM / @SBM	Outputting bitmap image
@GBB / @SBB	Background color
@GBT / @SBT	Aspect ratio
@GZP / @SZP	Display position
@GBA / @SBA	Bitmap
@GPB / @SPB	Outputting bitmap at startup
@GBD / @SBD	Dividing bitmap memory
@GBV	Bitmap memory status
@GBN / @SBN	Bitmap number
@GFZ / @SFZ	Freeze
@CAP	Capturing input image

■ **Other settings**

Command	Function
@GLS / @SLS	Key lock
@GLM / @SLM	Setting target front panel keys to be locked
@GBZ / @SBZ	Setting buzzer
@GSS	Input and output status
@GES	Monitor’s EDID
@GIV	Version

3.3 Detailed descriptions

3.3.1 Error status

@ERR	**Error status**	
Format	Only return value	
Return value	@ERR, error ↵	
Parameter	error: Error status 1 = Erroneous parameter format or value 2 = Undefined command or wrong format 3 = Currently cannot be used. 4 = Not used. 5 = The command could not be executed, because the control command was not registered. 6 = The command could not be processed since another command was being executed. 7 = Automatic measurement of input timing failed. 8 = Loading EDID from the sink device failed. 9 = Not used. 10 = The control command was stopped according to the stop condition. 11 = The control command was stopped since the number of retries exceeded the set value of “RETRY”. 12 = The control command of PJLink was stopped since the password did not match. 13 = The image could not be captured since the image size to be captured exceeded the reserved memory size. 14 = Capturing input image failed.	
Example	@IOS ↵ @ERR,2 ↵	Sending @IOS command Command format error
Remarks	—	

3.3.2 Power switch

@GDS/@SDS	**Sink device power switch**	
Function	Getting	Setting
Format	@GDS ↵	@SDS, ch_1, onoff_1 (, ch_2, onoff_2) ↵
Return value	@GDS, onoff_1 (, onoff_2) ↵	@SDS, ch_1, onoff_1 (, ch_2, onoff_2) ↵
Parameter	onoff_1-2: Sink device power switch 0 = OFF, 1 = ON	
	ch_1-2: Output channel 0 = All outputs, 1 = OUT1, 2 = OUT2	
Example	@GDS ↵ @GDS,1,1 ↵	Getting power switch status of the sink device. Power switches of OUT1 and OUT2: ON
	@SDS,1,1 ↵ @SDS,1,1 ↵	Setting power switch of the sink device connected to OUT1 to ON. Completed normally.
Remarks	Since the result is sent after turning on/off the device, it may take a long time to reply.	

3.3.3 Input channels

@GSW / @SSW	**Switching video and audio channel simultaneously**	
Function	Getting	Setting
Format	@GSW ↵	@SSW, input_1, output_1 (, input_2, output_2) ↵
Return value	@GSW, video_1, audio_1 (, video_2, audio_2) ↵	@SSW, input_1, output_1 (, input_2, output_2) ↵
Parameter	video_1-2 : Video input channel audio_1-2 : Audio input channel input_1-2 : Video and audio input channel 0 = OFF [Default], 1 = IN1, 2 = IN2, 3 = IN3, 4 = IN4, 5 = IN5 6 = IN6, 7 = IN7	
	output_1-2: Video and audio output channel 0 = all outputs, 1 = OUT1, 2 = OUT2	
Example	@GSW ↵ @GSW,2,2,0,0 ↵	Getting input channel status. OUT1 input channel is IN2 for both video and audio; OUT2 input channel is OFF for both video and audio.
	@SSW,1,1 ↵ @SSW,1,1 ↵	Selecting OUT1 input channel to IN1. Completed normally.
Remarks	—	

@GSV / @SSV	**Switching video channel**	
Function	Getting	Setting
Format	@GSV ↵	@SSV, input_1, output_1 (, input_2, output_2) ↵
Return value	@GSV, input_1 (, input_2) ↵	@SSV, input_1, output_1 (, input_2, output_2) ↵
Parameter	input_1-2: Video input channel 0 = OFF [Default], 1 = IN1, 2 = IN2, 3 = IN3, 4 = IN4, 5 = IN5 6 = IN6, 7 = IN7	
	output_1-2: Video output channel 0 = All outputs, 1 = OUT1, 2 = OUT2	
Example	@GSV ↵ @GSV,1,1 ↵	Getting video input channel status. OUT1 and OUT2 input channels: IN1
	@SSV,1,1 ↵ @SSV,1,1 ↵	Setting OUT1 input channel to IN1. Completed normally.
Remarks	—	

@GSA / @SSA	**Switching audio channel**	
Function	Getting	Setting
Format	@GSA ↵	@SSA, input_1, output_1 (, input_2, output_2) ↵
Return value	@GSA, input_1 (, input_2) ↵	@SSA, input_1, output_1 (, input_2, output_2) ↵
Parameter	input_1-2: Audio input channel 0 = OFF [Default], 1 = IN1, 2 = IN2, 3 = IN3, 4 = IN4, 5 = IN5 6 = IN6, 7 = IN7	
	output_1-2: Audio output channel 0 = All inputs, 1 = OUT1, 2 = OUT2	
Example	@GSA ↵ @GSA,1,1 ↵	Getting audio input channel status. OUT1 and OUT2 input channels: IN1
	@SSA,1,1 ↵ @SSA,1,1 ↵	Setting OUT1 input channel to IN1. Completed normally.
Remarks	ー	

3.3.4 Position, size, and masking

@GOT / @SOT	**Output resolution**	
Function	Getting	Setting
Format	@GOT ↵	@SOT, ch_1, resolution_1 (, ch_2, resolution_2) ↵
Return value	@GOT, resolution_1 (, resolution_2) ↵	@SOT, ch_1, resolution_1 (, ch_2, resolution_2) ↵
Parameter	resolution_1-2: Output resolution 0 = AUTO-A [Default], 1 = AUTO-B, 2 = VGA@60 (640x480), 3 = SVGA@60 (800x600), 4 = XGA@60 (1024x768), 5 = WXGA@60 (1280x768), 6 = WXGA@60 (1280x800), 7 = Quad-VGA@60 (1280x960), 8 = SXGA@60 (1280x1024), 9 = WXGA@60 (1360x768), 10 = WXGA@60 (1366x768), 11 = SXGA+@60 (1400x1050), 12 = WXGA+@60 (1440x900), 13 = WXGA++@60 (1600x900), 14 = UXGA@60 (1600x1200), 15 = WSXGA+@60 (1680x1050), 16 = VESAHD@60 (1920x1080), 17 = WUXGA@60 (1920x1200), 18 = QWXGA@60 (2048x1152), 19 = 480i@59.94 (720x480), 20 = 480p@59.94 (720x480), 21 = 576i@50 (720x576), 22 = 576p@50 (720x576), 23 = 720p@50 (1280x720), 24 = 720p@59.94 (1280x720), 25 = 720p@60 (1280x720), 26 = 1080i@50 (1920x1080), 27 = 1080i@59.94 (1920x1080), 28 = 1080i@60 (1920x1080), 29 = 1080p@50 (1920x1080), 30 = 1080p@59.94 (1920x1080), 31 = 1080p@60 (1920x1080)	
	ch_1-2: Output channel 0 = All inputs, 1 = OUT1, 2 = OUT2	
Example	@GOT ↵ @GOT,7,30 ↵	Getting output resolution. OUT1: Quad-VGA; OUT2:1080p 59.94Hz
	@SOT,1,11 ↵ @SOT,1,11 ↵	Setting OUT1 output resolution to SXGA+. Completed normally.
Remarks	—	

@GTD	**Actual output resolution**	
Function	Getting	
Format	@GTD ↵	
Return value	@GTD, resolution_1 (, resolution_2) ↵	
Parameter	resolution_1-2: Actual output resolution 1 = VGA@60 (640x480), 2 = SVGA@60 (800x600), 3 = XGA@60 (1024x768), 4 = WXGA@60 (1280x768), 5 = WXGA@60 (1280x800), 6 = Quad-VGA@60 (1280x960), 7 = SXGA@60 (1280x1024), 8 = WXGA@60 (1360x768), 9 = WXGA@60 (1366x768), 10 = SXGA+@60 (1400x1050), 11 = WXGA+@60 (1440x900), 12 = WXGA++@60 (1600x900), 13 = UXGA@60 (1600x1200), 14 = WSXGA+@60 (1680x1050), 15 = VESAHD@60 (1920x1080), 16 = WUXGA@60 (1920x1200), 17 = QWXGA@60 (2048x1152), 18 = 480i@59.94 (720x480), 19 = 480p@59.94 (720x480), 20 = 576i@50 (720x576), 21 = 576p@50 (720x576), 22 = 720p@50 (1280x720), 23 = 720p@59.94 (1280x720), 24 = 720p@60 (1280x720), 25 = 1080i@50 (1920x1080), 26 = 1080i@59.94 (1920x1080) [Default], 27 = 1080i@60 (1920x1080), 28 = 1080p@50 (1920x1080), 29 = 1080p@59.94 (1920x1080), 30 = 1080p@60 (1920x1080)	
Example	@GTD ↵ @GTD,29,26 ↵	Getting actual output resolution. OUT1:1080p 59.94Hz; OUT2: 1080i 59.94 Hz
Remarks	If “@GOT / @SOT Output resolution (P.21)” is set to “AUTO-A” or “AUTO-B”, the actual output resolution is replied. If it is set to a resolution other than “AUTO-A” and “AUTO-B”, the set resolution is replied.	

@GUM / @SUM	**Aspect ratio of sink device**	
Function	Getting	Setting
Format	@GUM ↵	@SUM, ch_1, aspect_1 (, ch_2, aspect_2) ↵
Return value	@GUM, aspect_1 (, aspect_2) ↵	@SUM, ch_1, aspect_1 (, ch_2, aspect_2) ↵
Parameter	aspect_1-2: Aspect ratio of the sink device 0 = RESOLUTION [Default], 1 = 4:3, 2 = 5:4, 3 = 5:3, 4 = 16:9, 5 = 16:10	
	ch_1-2: Output channel 0 = All outputs, 1 = OUT1, 2 = OUT2	
Example	@GUM ↵ @GUM,4,5 ↵	Getting aspect ratio of the connected sink device. OUT1: 16:9; OUT2: 16:10
	@SUM,1,4 ↵ @SUM,1,4 ↵	Connecting 16:9 sink device to OUT1. Completed normally.
Remarks	ー	

@GAP / @SAP	**Aspect ratio**	
Function	Getting	Setting
Format	@GAP ↵	@SAP, ch_1, aspect_1 (, ch_2, aspect_2･･･) ↵
Return value	@GAP, aspect_1, aspect_2, aspect_3, aspect_4, aspect_5 ↵	@SAP, ch_1, aspect_1 (, ch_2, aspect_2･･･) ↵
Parameter	aspect_1-5: Aspect ratio 0 = AUTO-1 [Default] 1 = AUTO-2, 2 = 4:3, 3 = 16:9, 4 = 14:9, 5 = 16:9 LETTER BOX, 6 = 14:9 LETTER BOX, 7 = 4:3 SIDE PANEL, 8 = 14:9 SIDE PANEL, 9 = FULL, 10 = THROUGH	
	ch_1-7: Input channel 0 = All inputs, 1 = IN1 to 7 = IN7	
Example	@GAP ↵ @GAP,0,0,2,0,0,0,0 ↵	Getting aspect ratio. IN3:4:3; other inputs: AUTO-1.
	@SAP,7,2 ↵ @SAP,7,2 ↵	Setting IN7 aspect ratio to 4:3. Completed normally.
Remarks	―	

@GAR / @SAR	**Aspect ratio restoration**	
Function	Getting	Setting
Format	@GAR ↵	@SAR, ch_1, mode_1 (, ch_2, mode_2･･･) ↵
Return value	@GAR, mode_1, mode_2, mode_3, mode_4, mode_5 ↵	@SAR, ch_1, mode_1 (, ch_2, mode_2･･･) ↵
Parameter	mode_1-7: Aspect ratio restoration processing 0 = Letter box/Side panel [Default], 1 = Side cut/Top bottom cut	
	ch_1-7: Input channel 0 = All inputs, 1 = IN1 to 7 = IN7	
Example	@GAR ↵ @GAR,0,0,1,0,0,0,0 ↵	Getting aspect ratio restoration processing. IN3: Side cut/Top bottom cut Other inputs: Letter box/Side panel
	@SAR,5,1 ↵ @SAR,5,1 ↵	Setting IN5 to Side cut/Top bottom cut Completed normally.
Remarks	―	

@GOV / @SOV	**Overscan**	
Function	Getting	Setting
Format	@GOV ↵	@SOV, ch_1, overscan_1 (, ch_2, overscan_2･･･) ↵
Return value	@GOV, overscan_1, overscan_2, overscan_3, overscan_4, overscan_5, overscan_6, iverscan_7 ↵	@SOV, ch_1, overscan_1 (, ch_2, overscan_2･･･) ↵
Parameter	overscan_1-7: Overscan 100% to 115% [Default]: NTSC / PAL / SDTV: 105%, HDTV or PC: 100%	
	ch_1-7: Input channel 0 = All inputs, 1 = IN1 to 7 = IN7	
Example	@GOV ↵ @GOV,100,100,105,100,100,100,100 ↵	Getting overscan. IN3: 105%, other inputs: 100%
	@SOV,7,105 ↵ @SOV,7,105 ↵	Setting IN7 overscan to 105%. Completed normally.
Remarks	―	

@GNP / @SNP	**Input position**	
Function	Getting	Setting
Format	@GNP ↵	@SNP, ch_1, h_position_1, v_position_1 (, ch_2, h_position_2, v_position_2･･･) ↵
Return value	@GNP, h_position_1, v_position_1, h_position_2, v_position_2, h_position_3, v_position_3, h_position_4, v_position_4, h_position_5, v_position_5 h_position_6, v_position_6, h_position_7, v_position_7, ↵	@SNP, ch_1, h_position_1, v_position_1 (, ch_2, h_position_2, v_position_2･･･) ↵
Parameter	h_position_1-7: Horizontal input position -Horizontal input size to +Horizontal output resolution [Default]: 0	
	v_position_1-7: Vertical input position -Vertical input size to +Vertical output resolution [Default]: 0	
	ch_1-7: Input channel 0 = All inputs, 1 = IN1 to 7 = IN7	
Example	@GNP ↵ @GNP,-50,20,0,0,0,0,0,0,0,0,0,0,0,0 ↵	Getting input position. IN1: horizontal input display is -50, vertical input display +20 Other inputs: horizontal and vertical input position are 0.
	@SNP,1,-50,20 ↵ @SNP,1,-50,20 ↵	Setting IN1 horizontal and vertical input positions are to -50 and +20, respectively. Completed normally.
Remarks	If resolutions differ depending on output, the resolution of OUT1 will be the standard.	

@GNS / @SNS	**Input size**	
Function	Getting	Setting
Format	@GNS ↵	@SNS, ch_1, h_size_1, v_size_1 (, ch_2, h_size_2, v_size_2･･･) ↵
Return value	@GNS, h_size_1, v_size_1, h_size_2, h_size_2, h_size_3, h_size_3, h_size_4, h_size_4, h_size_5, h_size_5, h_size_6, h_size_6, h_size_7, h_size_7 ↵	@SNS, ch_1, h_size_1, v_size_1 (, ch_2, h_size_2, v_size_2･･･) ↵
Parameter	h_size_1-7: Horizontal input size Horizontal output resolution÷4 to Horizontal output resolution×4 [Default]: Horizontal output resolution	
	v_size_1-7: Vertical display size Vertical output resolution÷4 to Vertical output resolution×4 [Default]: Vertical output resolution	
	ch_1-5: Input channel 0 = All inputs, 1 = IN1 to 7 = IN7	
Example	@GNS ↵ @GNS,1925,1084,1920,1080,1920,1080,1920,1080,1920,1080,1920,1080,1920,1080 ↵	Getting input size. Horizontal and vertical display sizes of IN1 are 1925 and 1084, respectively; other inputs: 1920 and 1080, respectively.
	@SNS,1,1925,1084 ↵ @SNS,1,1925,1084 ↵	Setting IN1 horizontal and vertical input size are 1925 and 1084, respectively. Completed normally.
Remarks	If resolutions differ depending on outputs, the resolution of OUT1 will be the standard.	

@GNM / @SNM	**Input masking**	
Function	Getting	Setting
Format	@GNM, ch ↵	@SNM, ch, left, right, top, bottom ↵
Return value	@GNM, ch, left, right, top, bottom ↵	@SNM, ch, left, right, top, bottom ↵
Parameter	ch: Input channel 1 = IN1 to 7 = IN7	
	left: Left side masking Horizontal input position to right side masking [Default]: 0	
	right: Right side masking Left side masking to horizontal input position +horizontal input size [Default]: Horizontal input size	
	top: Top side masking Vertical input position to bottom side masking [Default]: 0	
	bottom: Bottom side masking Top side masking to vertical input position +vertical input size [Default]: Vertical input size	
Example	@GNM,1 ↵ @GNM,1,0,1920,0,1080 ↵	Getting IN1 input masking. Left: 0, right: 1920, top:0, bottom: 1080
	@SNM,1,0,1920,0,1080 ↵ @SNM,1,0,1920,0,1080 ↵	Setting IN1 input masking to 0 for left, 1920 for right, 0 for top, 1080 for bottom. Completed normally.
Remarks	ー	

@IAS	**Input automatic sizing**	
Function	Setting	
Format	@IAS, ch_1 (, ch_2･･･) ↵	
Return value	@IAS, ch_1 (, ch_2･･･) ↵	
Parameter	ch_1-7: Input channel 0 = All inputs, 1 = IN1 to 7 = IN7	
Example	@IAS,1↵ @IAS,1 ↵	Initialize the following settings in order to display images input from IN1 on the full screen: @GAP / @SAP, @GOV / @SOV, @GNP / @SNP, @GNS / @SNS, @GNM / @SNM Completed normally.
Remarks	ー	

@GOP / @SOP	**Output position**	
Function	Getting	Setting
Format	@GOP ↵	@SOP, ch_1, h_position_1, v_position_1 (, ch_2, h_position_2, v_position_2) ↵
Return value	@GOP, h_position_1, v_position_1 (, h_position_2, v_position_2) ↵	@SOP, ch_1, h_position_1, v_position_1 (, ch_2, h_position_2, v_position_2) ↵
Parameter	h_position_1-2: Horizontal output position -Horizontal input size to +Horizontal output resolution [Default]: 0	
	v_position_1-2: Vertical output position -Vertical input size to +Vertical output resolution [Default]: 0	
	ch_1-2: Output channel 0 = All outputs, 1 = OUT1, 2 = OUT2	
Example	@GOP ↵ @GOP,5,20,0,0 ↵	Getting output position. OUT1 horizontal and vertical positions are +5 and +20, respectively. OUT2 vertical and horizontal positions: 0
	@SOP,1,5,20 ↵ @SOP,1,5,20 ↵	Setting OUT1 horizontal and vertical positions to +5 and +20, respectively. Completed normally.
Remarks	—	

@GOS / @SOS	**Output size**	
Function	Getting	Setting
Format	@GOS ↵	@SOS, ch_1, h_size_1, v_size_1 (, ch_2, h_size_2, v_size_2) ↵
Return value	@GOS, h_size_1, v_size_1 (, h_size_2, v_size_2) ↵	@SOS, ch_1, h_size_1, v_size_1 (, ch_2, h_size_2, v_size_2) ↵
Parameter	h_size_1-2: Horizontal output size Horizontal output resolution÷4 to Horizontal output resolution×4 [Default]: Horizontal output resolution	
	v_size_1-2: Vertical output size Vertical output resolution÷4 to Vertical output resolution×4 [Default]: Vertical output resolution	
	ch_1-2: Output channel 0 = All outputs, 1 = OUT1, 2 = OUT2	
Example	@GOS ↵ @GOS,1920,1035,1920,1080 ↵	Getting output size. OUT1 horizontal and vertical output sizes are 1920 and 1035, respectively. OUT2 horizontal and vertical output sizes are 1920 and 1080, respectively.
	@SOS,1,1920,1080 ↵ @SOS,1,1920,1080 ↵	Setting OUT1 horizontal and vertical output sizes to 1920 and 1080, respectively. Completed normally.
Remarks	—	

@GOM / @SOM	**Output masking**	
Function	Getting	Setting
Format	@GOM, ch ↵	@SOM, ch, left, right, top, bottom ↵
Return value	@GOM, ch, left, right, top, bottom ↵	@SOM, ch, left, right, top, bottom ↵
Parameter	ch: Output channel 1 = OUT1, 2 = OUT2	
	left: Left side masking Horizontal output position (0 or larger) to right side masking [Default]: 0	
	right: Right side masking Left side masking to horizontal output position +horizontal output size (horizontal output resolution or smaller) [Default]: Horizontal output resolution	
	top: Top side masking Vertical output position (0 or larger) to bottom side masking [Default]: 0	
	bottom: Bottom side masking Bottom side masking to vertical output position +vertical output size (vertical output resolution or smaller) [Default]: Vertical output resolution	
Example	@GOM,1 ↵ @GOM,1,0,1920,0,1080 ↵	Getting OUT1 output masking. Left: 0, right: 1920, top: 0, bottom: 1080
	@SOM,1,0,1920,0,1080 ↵ @SOM,1,0,1920,0,1080 ↵	Setting OUT1 output masking to 0 for left, 1920 for right, 0 for top, and 1080 for bottom. Completed normally.
Remarks	―	

@OAS	**Output automatic sizing**	
Function	Setting	
Format	@OAS, ch_1 (, ch_2) ↵	
Return value	@OAS, ch_1 (, ch_2) ↵	
Parameter	ch_1-2: Output channel 0 = All outputs, 1 = OUT1, 2 = OUT2	
Example	@OAS,1 ↵ @OAS,1 ↵	Initialize the following settings in order to display OUT1 output images on the full screen: @GOP / @SOP, @GOS / @SOS, @GOM / @SOM Completed normally.
Remarks	―	

@GBC / @SBC	**Background color**	
Function	Getting	Setting
Format	@GBC, ch ↵	@SBC, ch_1, red_1, green_1, blue_1 (, ch_2, red_2, green_2, blue_2) ↵
Return value	@GBC, ch, red, green, blue ↵	@SBC, ch_1, red_1, green_1, blue_1 (, ch_2, red_2, green_2, blue_2) ↵
Parameter	ch: Output channel 1 = OUT1, 2 = OUT2	
	ch_1-2: Output channel 0 = All outputs, 1 = OUT1, 2 = OUT2	
	red / red_1-2 : Background color (Red) green / green_1-2: Background color (Green) blue / blue_1-2 : Background color (Blue) 0 to 255 [Default]: 0 (black)	
Example	@GBC,1 ↵ @GBC,1,128,128,128 ↵	Getting OUT1 background color. RGB: 128 (gray).
	@SBC,1,128,128,128 ↵ @SBC,1,128,128,128 ↵	Setting OUT1 background color to 128 (gray) for all RGB. Completed normally.
Remarks	—	

@GTP / @STP	**Test pattern**	
Function	Getting	Setting
Format	@GTP ↵	@STP, ch_1, pattern_1, scroll_1 (, ch_2, pattern_2, scroll_2) ↵
Return value	@GTP, pattern_1, scroll_1 (, pattern_2, scroll_2) ↵	@STP, ch_1, pattern_1, scroll_1 (, ch_2, pattern_2, scroll_2) ↵
Parameter	pattern_1-2: Test pattern 0 = OFF [Default], 1 = VERTICAL COLOR BAR, 2 = HORIZONTAL COLOR BAR, 3 = VERTICAL GRAY SCALE, 4 = HORIZONTAL GRAY SCALE, 5 = VERTICAL LAMP, 6 = HORIZONTAL LAMP, 7 = 100% WHITE RASTER, 8 = 50% WHITE RASTER, 9 = 100% RED RASTER, 10 = 100% GREEN RASTER, 11 = 100% BLUE RASTER, 12 = CROSS HATCH, 13 = OUTPUT FRAME, 14 = VERTICAL STRIPE, 15 = HORIZONTAL STRIPE, 16 = VERTICAL ZEBRA, 17 = HORIZONTAL ZEBRA Test pattern numbers 1 to 6, 16 and 17 can be scrolled.	
	scroll_1-2: Scrolling 0 = OFF [Default], 1 = 3 pixels/1 frame to 10 = 30 pixels/1 frame The number of pixels to be scrolled per frame = the set value × 3	
	ch_1-2: Output channel 0 = All outputs, 1 = OUT1, 2 = OUT2	
Example	@GTP ↵ @GTP,3,1,0,0 ↵	Getting output setting of test pattern. OUT1: VERTICAL GRAY SCALE at 3 pixels/frame scrolling OUT2: test pattern is not output.
	@STP,1,1,0 ↵ @STP,1,1,0 ↵	Setting OUT1 to VERTICAL COLOR BAR without scrolling. Completed normally.
Remarks	—	

3.3.5 Image quality

@GFL / @SFL	**Sharpness**	
Function	Getting	Setting
Format	@GFL ↵	@SFL, ch_1, sharp_1 (, ch_2, sharp_2･･･) ↵
Return value	@GFL, sharp_1, sharp_2, sharp_3, sharp_4, sharp_5, sharp_6, sharp_7 ↵	@SFL, ch_1, sharp_1 (, ch_2, sharp_2･･･) ↵
Parameter	sharp_1-7: Sharpness -5 to +15 [Default]: 0	
	ch_1-7: Input channel 0 = All inputs, 1 = IN1 to 7 = IN7	
Example	@GFL ↵ @GFL,5,0,0,0,0,0,0 ↵	Getting sharpness setting. IN1: +5; other input channels: 0.
	@SFL,1,5 ↵ @SFL,1,5 ↵	Setting IN1 sharpness to +5. Completed normally.
Remarks	―	

@GBR / @SBR	**Input brightness**	
Function	Getting	Setting
Format	@GBR ↵	@SBR, ch_1, bright_1 (, ch_2, bright_2･･･) ↵
Return value	@GBR, bright_1, bright_2, bright_3, bright_4, bright_5, bright_6, bright_7 ↵	@SBR, ch_1, bright_1 (, ch_2, bright_2･･･) ↵
Parameter	bright_1-5: Input brightness 80 to 120 [Default] 100	
	ch_1-5: Input channel 0 = All inputs, 1 = IN1 to 7 = IN7	
Example	@GBR ↵ @GBR,110,100,100,100,100,100,100 ↵	Getting brightness setting. IN1: 110%; other input channels: 100%.
	@SBR,3,110 ↵ @SBR,3,110 ↵	Setting IN3 brightness to 110%. Completed normally.
Remarks	―	

@GCO / @SCO	**Input contrast**	
Function	Getting	Setting
Format	@GCO, ch ↵	@SCO, ch_1, red_1, green_1, blue_1 (, ch_2, red_2, green_2, blue_2･･･) ↵
Return value	@GCO, ch, red, green, blue ↵	@SCO, ch_1, red_1, green_1, blue_1 (, ch_2, red_2, green_2, blue_2･･･) ↵
Parameter	ch: Input channel 1 = IN1 to 7 = IN7	
	ch_1-7: Input channel 0 = All inputs, 1 = IN1 to 7 = IN7	
	red / red_1-7 : Input contrast (Red) green / green_1-7 : Input contrast (Green) blue / blue_1-7 : Input contrast (Blue) 0 to 200 [Default]:100	
Example	@GCO,3 ↵ @GCO,3,105,100,95 ↵	Getting IN3 contrast setting. Red: 105%, green: 100%, blue: 95%
	@SCO,3,105,100,95 ↵ @SCO,3,105,100,95 ↵	Setting IN3 contrast to 105% for red, 100% for green, 95% for blue. Completed normally.
Remarks	―	

@GHU / @SHU	**Hue**	
Function	Getting	Setting
Format	@GHU ↵	@SHU, ch_1, hue_1 (, ch_2, hue_2･･･) ↵
Return value	@GHU, hue _1, hue _2, hue _3, hue _4, hue _5, hue_6, hue_7 ↵	@SHU, ch_1, hue_1 (, ch_2, hue_2･･･) ↵
Parameter	hue_1-7: Hue 0 to 359 [Default]: 0	
	ch_1-7: Input channel 0 = All inputs, 1 = IN1 to 7 = IN7	
Example	@GHU ↵ @GHU,60,0,0,0,0,0,0 ↵	Getting HUE settings. IN1: 60° ; other inputs: 0°
	@SHU,1,60 ↵ @SHU,1,60 ↵	Setting IN1 HUT to 60° . Completed normally.
Remarks	―	

@GST / @SST	**Saturation**	
Function	Getting	Setting
Format	@GST ↵	@SST, ch_1, saturation_1 (, ch_2, saturation_2･･･) ↵
Return value	@GST, saturation_1, saturation_2, saturation_3, saturation_4, saturation_5, saturation_6, saturation_7 ↵	@SST, ch_1, saturation_1 (, ch_2, saturation_2･･･) ↵
Parameter	saturation_1-7: Saturation 0 to 200 [Default]: 100	
	ch_1-7: Input channel 0 = All inputs, 1 = IN1 to 7 = IN7	
Example	@GST ↵ @GST,100,100,100,100,105,100,100 ↵	Getting saturations. IN5: 105%; other inputs: 100%
	@SST,5,105 ↵ @SST,5,105 ↵	Setting IN5 saturation to 105%. Completed normally.
Remarks	―	

@GSU / @SSU	**Black level**	
Function	Getting	Setting
Format	@GSU ↵	@SSU, ch_1, setup_1 (, ch_2, setup_2･･･) ↵
Return value	@GSU, setup_1, setup_2, setup_3, setup_4, setup_5, setup_6, setup_7 ↵	@SSU, ch_1, setup_1 (, ch_2, setup_2･･･) ↵
Parameter	setup_1-7: Black level -20 = -20 x 0.5 (-10.0%) to +20 = +20 x 0.5 (+10.0%) [Default]: ±0 = ±0.0%	
	ch_1-7: Input channel 0 = All inputs, 1 = IN1 to 7 = IN7	
Example	@GSU ↵ @GSU,0,0,0,0,15,0,0 ↵	Getting black levels. IN5: +7.5%; other inputs: 0%.
	@SSU,5,15 ↵ @SSU,5,15 ↵	Setting IN5 black level to +7.5%. Completed normally.
Remarks	―	

@IDC	**Input default color**	
Function	Setting	
Format	@IDC, ch_1 (, ch_2･･･) ↵	
Return value	@IDC, ch_1 (, ch_2･･･) ↵	
Parameter	ch_1-7: Input channel 0 = All inputs, 1 = IN1 to 7 = IN7	
Example	@IDC,1 ↵ @IDC,1 ↵	Initialize the following settings of IN1: @GFL / @SFL, @GBR / @SBR, @GCO / @SCO, @GHU / @SHU, @GST / @SST, @GSU / @SSU Completed normally.
Remarks	―	

@GOB / @SOB	**Output brightness**	
Function	Getting	Setting
Format	@GOB ↵	@SOB, ch_1, bright_1 (, ch_2, bright_2) ↵
Return value	@GOB, bright_1 (, bright_2) ↵	@SOB, ch_1, bright_1 (, ch_2, bright_2) ↵
Parameter	bright_1-2: Output brightness 80 to 120 [Default] 100	
	ch_1-2: Output channel 0 = All outputs, 1 = OUT1, 2 = OUT2	
Example	@GOB ↵ @GOB,110,100 ↵	Getting brightness settings. OUT1: 110%; OUT2: 100%.
	@SOB,1,110 ↵ @SOB,1,110 ↵	Setting OUT1 brightness to 110%. Completed normally.
Remarks	―	

@GOC / @SOC	**Output contrast**	
Function	Getting	Setting
Format	@GOC, ch ↵	@SOC, ch_1, red_1, green_1, blue_1 (, ch_2, red_2, green_2, blue_2) ↵
Return value	@GOC, ch, red, green, blue ↵	@SOC, ch_1, red_1, green_1, blue_1 (, ch_2, red_2, green_2, blue_2) ↵
Parameter	ch: Output channel 1 = OUT1, 2 = OUT2	
	ch_1-2: Output channel 0 = All outputs, 1 = OUT1, 2 = OUT2	
	red / red_1-2 : Output contrast (Red) green / green_1-2 : Output contrast (Green) blue / blue_1-2 : Output contrast (Blue) 0 to 200 [Default]: 100	
Example	@GOC,1 ↵ @GOC,1,105,100,95 ↵	Getting OUT1 contrast setting. Red: 105%, green: 100%, blue: 95%
	@SOC,1,105,100,95 ↵ @SOC,1,105,100,95 ↵	Setting OUT1 contrast to 105% for red, 100% for green, 95% for blue. Completed normally.
Remarks	–	

@ODC	**Output default color**	
Function	Setting	
Format	@ODC, ch_1 (, ch_2) ↵	
Return value	@ODC, ch_1 (, ch_2) ↵	
Parameter	ch_1-2: Output channel 0 = All outputs, 1 = OUT1, 2 = OUT2	
Example	@ODC,1 ↵ @ODC,1 ↵	Initializing OUT1 image quality settings. @GOB / @SOB, @GOC / @SOC Completed normally.
Remarks	–	

3.3.6 Input settings

@GDT / @SDT	**No-signal-input monitoring**	
Function	Getting	Setting
Format	@GDT ↵	@SDT, ch_1, time_1 (, ch_2, time_2･･･) ↵
Return value	@GDT, time_1, time_2, time_3, time_4(, time_5) ↵	@SDT, ch_1, time_1 (, ch_2, time_2･･･) ↵
Parameter	time_1-5: No-signal-input monitoring 0 = OFF, 2000 = 2 sec. to 15000 = 15 sec. [Default] 10000 = 10 sec. Set the value by 100 ms. If you set a value other than 0 for the lower 2 digits, these values will be rounded down. (For example, if you set it to 2955, the monitoring time is set to 2900 ms.)	
	ch_1-5: Input channel 0 = All digital inputs, 1 = IN1 to 5 = IN5	
Example	@GDT ↵ @GDT,6000,10000,10000, 4000,4000 ↵	Getting the monitoring time of input video signals. IN1: 6000 ms. (6 sec.), IN2 and IN3: 10000 ms. (10 sec.), IN4 and IN5: 4000 ms. (4 sec.)
	@SDT,3,6000 ↵ @SDT,3,6000 ↵	Setting the monitoring time of IN3 to 6000 ms. (6 sec.). Completed normally.
Remarks	Those commands are only for digital input. IN5 is available only when “1” (Digital signal). is selected for “**@GIN / @SIN**”.	

@GHE / @SHE	**HDCP input enabled/disabled**	
Function	Getting	Setting
Format	@GHE ↵	@SHE, ch_1, hdcp_1 (, ch_2, hdcp_2･･･) ↵
Return value	@GHE, hdcp_1, hdcp_2, hdcp_3, hdcp_4, (hdcp_5) ↵	@SHE, ch_1, hdcp_1 (, ch_2, hdcp_2･･･) ↵
Parameter	in_1-5: HDCP input enabled/disabled 0 = DISABLE, 1 = ENABLE [Default]	
	ch_1-5: Input channel 0 = All digital inputs, 1 = IN1 to 5 = IN5	
Example	@GHE ↵ @GHE,1,1,0,1,1 ↵	Getting HDCP input enabled/disabled. Setting IN3 and other inputs of HDCP input to DISABLE and ENALBE, respectively.
	@SHE,1,0 ↵ @SHE,1,0 ↵	Setting IN1 HDCP input to DISABLE. Completed normally.
Remarks	Those commands are only for digital input. IN5 is available only when “1” (Digital signal). is selected for “**@GIN / @SIN**”.	

@GIQ / @SIQ	**Input equalizer**	
Function	Getting	Setting
Format	@GIQ ↵	@SIQ, ch_1, level_1 (, ch_2, level_2･･･) ↵
Return value	@GIQ, level_1, level_2, level_3 ↵	@SIQ, ch_1, level_1 (, ch_2, level_2･･･) ↵
Parameter	level_1-4: Input equalizer 0 = OFF, 1 = ON [Default]	
	ch_1-4: Input channel 0 = All digital inputs, 1 = IN1 to 4 = IN4	
Example	@GIQ ↵ @GIQ,0,1,1,1 ↵	Getting input equalizer. IN1: Input equalizer OFF; other inputs: Input equalizer ON
	@SIQ,3,0 ↵ @SIQ,3,0 ↵	Setting IN3 input equalizer to OFF. Completed normally.
Remarks	Those commands are only for digital input.	

@GAI / @SAI	**Analog input type**	
Function	Getting	Setting
Format	@GAI ↵	@SAI, ch_1, type_1 (, ch_2, type_2) ↵
Return value	@GAI, type_1, type_2(, type_3) ↵	@SAI, ch_1, type_1 (, ch_2, type_2) ↵
Parameter	type_1-3: Signal type 0 = AUTO [Default], 1 = RGB, 2 = YPbPr, 3 = VIDEO AUTO, 4 = VIDEO, 5 = Y/C	
	ch_1-3: Input channel 0 = All analog inputs, 5 = IN5 to 7 = IN7	
Example	@GAI ↵ @GAI,0,2 ↵	Getting signal type of analog input. IN7: YPbPr, IN5 and IN6: AUTO
	@SAI,0,2 ↵ @SAI,0,2 ↵	Setting the signal type of all inputs to YPbPr. Completed normally.
Remarks	Those commands are only for analog input. IN5 is available only when “0” (analog signal). is selected for “**@GIN / @SIN**”.	

@GID / @SID	**Automatic detection of input video interruption**	
Function	Getting	Setting
Format	@GID ↵	@SID, ch_1, detect_1 (, ch_2, detect_2･･･) ↵
Return value	@GID, detect_1, detect_2, detect_3, detect_4, detect_5, detect_6, detect_7 ↵	@SID, ch_1, detect_1 (, ch_2, detect_2･･･) ↵
Parameter	detect_1-7: Automatic detection 0 = OFF, 1 = ON [Default]	
	ch_1-7: Input channel 0 = All inputs, 1 = IN1 to 7 = IN7	
Example	@GID ↵ @GID,1,1,1,1,1,0,1 ↵	Getting the setting of automatic detection of input video interruption. IN6: If input video signals are interrupted, the video output is not turned off instantly; other inputs: OFF
	@SID,2,0 ↵ @SID,2,0 ↵	If input video signals of IN2 are interrupted, not to turn off the video output instantly. Completed normally.
Remarks	―	

@GIN / @SIN	**Signal selection of DVI input connector**	
Function	Getting	Setting
Format	@GIN ↵	@SIN, signal ↵
Return value	@GIN, signal ↵	@SIN, signal ↵
Parameter	signal: Input signal selection 0 = Analog signal, 1 = Digital signal [Default]	
Example	@GIN ↵ @GIN, 0 ↵	Getting input signal. Analog signal can be input to the DVI input connector.
	@SIN, 1 ↵ @SIN, 1 ↵	Enabling digital signal to be input from the DVI input connector. Completed normally.
Remarks	―	

@GAU / @SAU	**Priority of input channel automatic switching**	
Function	Getting	Setting
Format	@GAU ↵	@SAU, in_1, out_1, priority_1 (, in_2, out_1, priority_1・・・) ↵
Return value	@GAU, in1_out1, in2_out1, in3_out1, in4_out1, in5_out1, in6_out1, in7_out1, in1_out2, in2_out2, in3_out2, in4_out2, in5_out2, in6_out2, in7_out2 ↵↵	@SAU, in_1, out_1, priority_1 (, in_2, out_1, priority_1・・・) ↵
Parameter	in1_out1-in7_out2: Priority 0 = OFF, 1 = Priority (high) to 7 = priority (low)	
	in_1-7: Input channel 1 = IN1 to 7 = IN7	
	out_1-2: Output channel 0 = All outputs, 1 = OUT1, 2 = OUT2	
	priority_1-5: Priority 0 = OFF, 1 = Priority (high) to 5 = priority (low)	
Example	@GAU ↵ @GAU,1,2,3,4,5,6,7,0,6,5,4,3,2,1 ↵	Getting priority of automatic switching. OUT1: IN1>IN2>・・・>IN7 OUT2: IN1:OFF IN2<IN3・・・<IN7
	@SAU,1,1,2 ↵ @SAU,1,1,2 ↵	Setting priority of OUT1 IN1 to “2”. Completed normally.
Remarks	ー	

@GMT / @SMT	**Masking time after automatic switching of input channel**	
Function	Getting	Setting
Format	@GMT ↵	@SMT, ch_1, time_1 (, ch_2, time_2) ↵
Return value	@GMT, time_1, time_2 ↵	@SMT, ch_1, time_1 (, ch_2, time_2) ↵
Parameter	time_1-2: Masking time 0 = 0 sec. to 999999 = 999.999 sec. [Default] 0 sec.	
	ch_1-2: Output channel 0 = All outputs, 1 = OUT1, 2 = OUT2	
Example	@GMT ↵ @GMT,2000,10000 ↵	Getting masking time after automatic switching of input channel. OUT1: 2000 ms. (2 sec.); OUT2: 10000 ms. (10 sec.)
	@SMT,1,2000,2,10000 ↵ @SMT,1,2000,2,10000 ↵	Setting masking time to 2000 ms. (2 sec.) for OUT1 and 10000 ms. (10 sec.) for OUT2. Completed normally.
Remarks	ー	

3.3.7 Input timing

@AIS / @AIT	**Automatic measurement**	
Function	Automatic measurement of start position and display period.	Automatic measurement considering aspect ratio
Format	@AIS, ch ↵	@AIT, ch ↵
Return value	@AIS, ch ↵	@AIT, ch (, mode) ↵
Parameter	ch: Input channel 5 = IN5 to 7 = IN7	
	mode: Measurement mode -1 = NEXT ASPECT, 0 = 4:3, 1 = 5:4, 2 = 5:3, 3 = 16:9, 4 = 16:10 If you select “NEXT ASPECT”, the next aspect ratio will be selected in order every time the automatic measurement is executed. If you do not set any mode parameter, “NEXT ASPECT” mode will be applied.	
Example	@AIS,6 ↵ @AIS,6 ↵	Measuring start position and display period of IN6 automatically. Completed normally.
	@AIT,6,0 ↵ @AIT,6,0 ↵	Measuring IN6 input timing setting at the aspect ratio of “4:3” automatically. Completed normally.
	@AIS,6 ↵ @ERR,7 ↵	If automatic measurement fails, an error is replied.
Remarks	Those commands are valid only when analog RGB/analog YPbPr signals are input.	

@GHT / @SHT	**The total number of horizontal dots**	
Function	Getting	Setting
Format	@GHT ↵	@SHT, ch, h_total ↵
Return value	@GHT, h_total_1, h_total_2, h_total_3, h_total_4, h_total_5, h_total_6, h_total_7 ↵	@SHT, ch, h_total ↵
Parameter	h_total_1-7 / h_total: The number of horizontal dots 400 to 4125 (sampling block should be 13 MHz to 162 MHz) [Default]: depends on input signals	
	ch: Input channel 0 = All analog inputs, 5 = IN5 to 7 = IN7	
Example	@GHT ↵ @GHT,2200,2200,0,2640,1344,1790,0 ↵	Getting the total number of horizontal dots. “0” will be replied to channels without input signals.
	@SHT,6,1344 ↵ @SHT,6,1344 ↵	Setting the total number of IN6 horizontal dots to “1344”. Completed normally.
	@SHT,6,1344 ↵ @ERR,3 ↵	If analog RGB signals or analog YPbPr signals are not input, an error will be replied.
Remarks	Getting command will acquire statuses of all channels. Setting commands are valid only when analog RGB/analog YPbPr signals are input.	

@GHS / @SHS	**Horizontal start position**	
Function	Getting	Setting
Format	@GHS ↵	@SHS, ch, h_start ↵
Return value	@GHS, h_start_1, h_start_2, h_start_3, h_start_4, h_start_5, h_start_6, h_start_7 ↵	@SHS, ch, h_start ↵
Parameter	h_start_1-7 / h_start: Horizontal start position 64 to 2900 (should be [the total number of horizontal dots – horizontal display period] or less) [Default]: depends on input signals	
	ch: Input channel 0 = All inputs, 1 = IN1 to 7 = IN7	
Example	@GHS ↵ @GHS,192,192,496,0,296,0,378 ↵	Getting horizontal start position. “0” will be replied to channels without input signals.
	@SHS,5,296 ↵ @SHS,5,296 ↵	Setting IN5 horizontal start position to “296”. Completed normally.
	@SHS,6,296 ↵ @ERR,3 ↵	If signals are not input, an error is replied.
Remarks	Setting command is valid only when signals are input.	

@GHD / @SHD	**Horizontal display period**	
Function	Getting	Setting
Format	@GHD ↵	@SHD, ch, h_disp ↵
Return value	@GHD, h_disp_1, h_disp_2, h_disp_3, h_disp_4, h_disp_5, h_disp_6, h_disp_7 ↵	@SHD, ch, h_disp ↵
Parameter	h_disp_1-7 / h_disp: Horizontal display period 64 to 2900 (should be [the total number of horizontal dots – 64] or less) [Default]: depends on input signals	
	ch: Input channel 0 = All inputs, 1 = IN1 to 7 = IN7	
Example	@GHD ↵ @GHD,1920,1920,0,1920,1024,1360,0 ↵	Getting horizontal display period “0” will be replied to channels without input signals.
	@SHD,5,1024 ↵ @SHD,5,1024 ↵	Setting IN5 horizontal display period to “1024”. Completed normally.
	@SHD,6,1024 ↵ @ERR,3 ↵	If signals are not input, an error is replied.
Remarks	Setting command is valid only when signals are input.	

@GVS / @SVS	**Vertical start position**	
Function	Getting	Setting
Format	@GVS ↵	@SVS, ch, v_start ↵
Return value	@GVS, v_start_1, v_start_2, v_start_3, v_start_4, v_start_5, v_start_6, v_start_7 ↵	@SVS, ch, v_start ↵
Parameter	v_start_1-7 / v_start: Vertical start position 10 to 2048 (should be [the total number of vertical lines – vertical display period] or less) [Default]: depends on input signals	
	ch: Input channel 0 = All inputs, 1 = IN1 to 7 = IN7	
Example	@GVS ↵ @GVS,40,0,40,40,35,0,24 ↵	Getting vertical start position “0” will be replied to channels without input signals.
	@SVS,5,35 ↵ @SVS,5,35 ↵	Setting IN5 vertical start position to “35”. Completed normally.
	@SVS,6,35 ↵ @ERR,3 ↵	If signals are not input, an error is replied.
Remarks	Setting command is valid only when signals are input.	

@GVD / @SVD	**Vertical display period**	
Function	Getting	Setting
Format	@GVD ↵	@SVD, ch, v_disp ↵
Return value	@GVD, v_disp_1, v_disp_2, v_disp_3, v_disp_4, v_disp_5, v_disp_6, v_disp_7 ↵	@SVD, ch, v_disp ↵
Parameter	v_disp_1-7 / v_disp: Vertical display period 10 to 2048 (should be [the total number of vertical lines – 10] or less) [Default]: depends on input signals	
	ch: Input channel 0 = All inputs, 1 = IN1 to 7 = IN7	
Example	@GVD ↵ @GVD,0,1080,1080,900,768,0,900 ↵	Getting vertical display period. “0” will be replied to channels without input signals.
	@SVD,5,768 ↵ @SVD,5,768 ↵	Setting IN5 vertical display period to “768”. Completed normally.
	@SVD,5,768 ↵ @ERR,3 ↵	If signals are not input, an error is replied.
Remarks	Setting command is valid only when signals are input.	

@GIS / @SIS	**Automatic measurement of start position**	
Function	Getting	Setting
Format	@GIS ↵	@SIS, ch, mode ↵
Return value	@GIS, mode_1, mode_2 ↵	@SIS, ch, mode ↵
Parameter	mode_1-3 / mode: Automatic measurement 0 = All inputs from this input channel are not measured automatically. 1 = Current input signals are not measured automatically. 2 = Current input signals are measured automatically. [Default]	
	ch: Input channel 0 = All analog inputs, 5 = IN5 to 7 = IN7	
Example	@GIS ↵ @GIS,0,2,2 ↵	Getting setting of Automatic measurement of start position. IN5: not measured automatically; IN6 and IN7: measured automatically.
	@SIS,6,1 ↵ @SIS,6,1 ↵	Setting not to measure signals input currently from IN6. Completed normally.
Remarks	Those commands are only for analog input. IN5 is available only when “0” (Analog signal). is selected for “**@GIN / @SIN**”.	

@GSM / @SSM	**Automatic measurement when unregistered signals are input**	
Function	Getting	Setting
Format	@GSM ↵	@SSM, mode ↵
Return value	@GSM, mode ↵	@SSM, mode ↵
Parameter	mode: Automatic measurement 0 = Not execute, 1 = Execute [Default]	
Example	@GSM ↵ @GSM,1 ↵	Getting automatic measurement mode when unregistered signals are input. Automatic measurement will be executed when unregistered signals are input.
	@SSM,1 ↵ @SSM,1 ↵	Execute automatic measurement when unregistered signals are input. Completed normally.
Remarks	—	

@RTT	**Loading device data**	
Function	Setting	
Format	@RTT, ch (, table) ↵	
Return value	@RTT, ch (, table) ↵	
Parameter	ch: Input channel 1 = IN1 to 7 = IN7	
	table: Device table 1 to 99 (Registered device data), 100 to 100+n (Preset device data. ”n” varies depending on input signals, but 0 for most cases.) Only for analog input, specify the device table.	
Example	@RTT,1 ↵ @RTT,1 ↵	Initializing IN1 input timing setting to the value detected automatically. Completed normally.
	@RTT,6,2 ↵ @RTT,6,2 ↵	Setting IN6 input timings to the values saved in the device table 2. Completed normally.
Remarks	This command is valid only when signals are input. For analog input, this command is valid only when the device data of input signals is registered.	

@STT	**Registering device data**	
Function	Saving	
Format	@STT, ch, table (, name) ↵	
Return value	@STT, ch, table (, name) ↵	
Parameter	ch: Input channel 5 = IN5 to 7 = IN7	
	table: Device table 1 to 99	
	name: Device table name Up to 14 characters from 20 to 7D of ASCII code. If you do not set the device table name, only input timing settings are saved. However, if no device table name is currently saved, the resolution is saved automatically as the device table name.	
Example	@STT,6,2 ↵ @STT,6,2 ↵	Saving IN6 input timing setting in device table 2 without changing the device table name.
	@STT,6,2,XGA 60Hz ↵ @STT,6,2,XGA 60Hz ↵	Saving the current IN6 input timing setting in device table 2 with the name of “XGA 60Hz”.
Remarks	This command is valid only if analog RGB / YPbPr signals are input.	

@GTK / @STK	**Tracking**	
Function	Getting	Setting
Format	@GTK ↵	@STK, ch_1, track_1 (, ch_2 , track_2･･･) ↵
Return value	@GTK, track_1, track_2 (, track_3) ↵	@STK, ch_1, track_1 (, ch_2 , track_2･･･) ↵
Parameter	track_1-3: Tracking 0 to 63 [Default] 0	
	ch_1-3: Input channel 0 = All analog inputs, 5 = IN5 to 7 = IN7	
Example	@GTK ↵ @GTK,4,0,5 ↵	Getting tracking. If no analog RGB or YPbPr signals are input, 0 is replied.
	@STK,6,4 ↵ @STK,6,4 ↵	Setting IN6 tracking to “4”. Completed normally.
Remarks	This command is valid only if analog RGB / YPbPr signals are input.	

3.3.8 Output settings

@GEQ / @SEQ	**Output equalizer**	
Function	Getting	Setting
Format	@GEQ ↵	@SEQ, ch_1, level_1 (, ch_2, level_2) ↵
Return value	@GEQ, level_1 (, level_2) ↵	@SEQ, ch_1, level_1 (, ch_2, level_2) ↵
Parameter	level_1-2: Output equalizer 0 = OFF [Default], 1 = LOW, 2 = MIDDLE, 3 = HIGH	
	ch_1-2: Output connector 0 = All HDMI output, 1 = OUT1A, 2 = OUT2A	
Example	@GEQ ↵ @GEQ,0,1 ↵	Getting output equalizer. OUT1A: OFF; OUT2A: LOW
	@SEQ,1,0 ↵ @SEQ,1,0 ↵	Setting OUT1A output equalizer to OFF. Completed normally.
Remarks	Those commands are only for HDMI output connector.	

@GDM / @SDM	**Output mode**	
Function	Getting	Setting
Format	@GDM ↵	@SDM, ch_1, mode_1 (, ch_2, mode_2･･･) ↵
Return value	@GDM, mode_1A, mode_1B (, mode_2A, mode_2B) ↵	@SDM, ch_1, mode_1 (, ch_2, mode_2･･･) ↵
Parameter	mode_1A / mode_2A: OUTA output mode mode_1B / mode_2B: OUTB output mode mode_1-4: Output mode 0 = DVI MODE, 1 = HDMI RGB MODE, 2 = HDMI YCbCr4:2:2 MODE, 3 = HDMI YCbCr4:4:4 MODE [Default]	
	ch_1-4: Output connector 0 = All outputs, 1 = OUT1A, 2 = OUT1B, 3 = OUT2A, 4 = OUT2B	
Example	@GDM ↵ @GDM,3,0,3,3 ↵	Getting output mode. OUT1B: DVI MODE; other outputs: HDMI YCbCr4:4:4 MODE.
	@SDM,1,3 ↵ @SDM,1,3 ↵	Setting OUT1A output mode to “HDMI YCbCr4:4:4 MODE”. Completed normally.
Remarks	―	

@GUY / @SUY	**Synchronous signal output when no video signals are input**	
Function	Getting	Setting
Format	@GUY ↵	@SUY, ch_1, sync_1 (, ch_2, sync_2) ↵
Return value	@GUY, sync_1 (, sync_2) ↵	@SUY, ch_1, sync_1 (, ch_2, sync_2) ↵
Parameter	sync_1-2: Synchronous signal output 0 = Not output, 1 = Output [Default]	
	ch_1-2: Output channels 0 = All outputs, 1 = OUT1, 2 = OUT2	
Example	@GUY ↵ @GUY,1,0 ↵	Getting synchronous signal output when no video signals are input. OUT1: synchronous signals are output. OUT2: synchronous signals are not output.
	@SUY,1,1 ↵ @SUY,1,1 ↵	Setting OUT1 to “1” (synchronous signals are output even if video signals are not input.). Completed normally.
Remarks	—	

@GBO / @SBO	**Output video when no video signals are input**	
Function	Getting	Setting
Format	@GBO ↵	@SBO, ch_1, video_1 (, ch_2, video_2) ↵
Return value	@GBO, video_1 (, video_2) ↵	@SBO, ch_1, video_1 (, ch_2, video_2) ↵
Parameter	video_1-2: Output video when no video signals are input 0 = Black, 1 = Blue [Default], 2 = Background color	
	ch_1-2: Output channel 0 = All outputs, 1 = OUT1, 2 = OUT2	
Example	@GBO ↵ @GBO,1,0 ↵	Getting output video when no video signals are input. OUT1: blue screen; OUT2: black screen
	@SBO,1,1 ↵ @SBO,1,1 ↵	Setting OUT1 to blue when no video signals are input. Completed normally.
Remarks	—	

@GFF / @SFF	**Video switching effect**	
Function	Getting	Setting
Format	@GFF ↵	@SFF, ch_1, switching_1 (, ch_2, switching_2) ↵
Return value	@GFF, switching_1 (, switching_2) ↵	@SFF, ch_1, switching_1 (, ch_2, switching_2) ↵
Parameter	switching_1-2: Video switching effect 0 = CUT, 1 = FADE OUT/IN, 2 = FREEZE + FADE OUT/IN [Default], 3 = LEFT→RIGHT WIPE, 4 = RIGHT→LEFT WIPE, 5 = TOP→BOTTOM WIPE, 6 = BOTTOM→TOP WIPE	
	ch_1-2: Output channel 0 = All outputs, 1 = OUT1, 2 = OUT2	
Example	@GFF ↵ @GFF,0,1 ↵	Getting input channel switching effect. OUT1: CUT; OUT2: FADE OUT/IN
	@SFF,1,1 ↵ @SFF,1,1 ↵	Setting OUT1 switching effect to FADE OUT/IN. Completed normally.
Remarks	—	

@GFT / @SFT	**Video switching time**	
Function	Getting	Setting
Format	@GFT ↵	@SFT, ch_1, time_1 (, ch_2, time_2) ↵
Return value	@GFT, time_1 (, time_2) ↵	@SFT, ch_1, time_1 (, ch_2, time_2) ↵
Parameter	time_1-2: Switching time 100 = 0.1 sec. to 2000 = 2 sec. [Default] 350 = 0.35 sec. Set the value by 10 ms. If you set a value other than 0 for the lower 1 digits, these values will be rounded down. (For example, if you set it to 395, the speed is set to 390 ms.)	
	ch_1-2: Output channel 0 = All outputs, 1 = OUT1, 2 = OUT2	
Example	@GFT ↵ @GFT,400,350 ↵	Getting switching time of video input channel. OUT1: 400 ms.; OUT2: 350 ms.
	@SFT,1,400 ↵ @SFT,1,400 ↵	Setting OUT1 switching time to 400 ms. Completed normally.
Remarks	—	

@GWC / @SWC	**Wipe color**	
Function	Getting	Setting
Format	@GWC, ch ↵	@SWC, ch_1, red_1, green_1, blue_1 (, ch_2, red_2, green_2, blue_2) ↵
Return value	@GWC, ch, red, green, blue ↵	@SWC, ch_1, red_1, green_1, blue_1 (, ch_2, red_2, green_2, blue_2) ↵
Parameter	ch: Output channel 1 = OUT1, 2 = OUT2	
	ch_1-2: Output channel 0 = All outputs, 1 = OUT1, 2 = OUT2	
	red / red_1-2 : Wipe color (Red) green / green_1-2 : Wipe color (Green) blue / blue_1-2 : Wipe color (Blue) 0 to 255 [Default] 0 (Black)	
Example	@GWC,1 ↵ @GWC,1,255,255,255 ↵	Getting OUT1 wipe color. RGB: 255 (white)
	@SWC,1,255,255,255 ↵ @SWC,1,255,255,255 ↵	Setting OUT1 wipe colors of RGB to “255” (white). Completed normally.
Remarks	―	

@GVO / @SVO	**Video output connector**	
Function	Getting	Setting
Format	@GVO ↵	@SVO, ch_1, out_1 (, ch_2, out_2･･･) ↵
Return value	@GVO, out_1A, out_1B (, out_2A, out_2B) ↵	@SVO, ch_1, out_1 (, ch_2, out_2･･･) ↵
Parameter	out_1A / out_2A: OUTA video output out_1B / out_2B: OUTB video output out_1-4 : Video output 0 = Not output, 1 = Output [Default]	
	ch_1-4: Output connector 0 = All outputs, 1 = OUT1A, 2 = OUT1B, 3 = OUT2A, 4 = OUT2B	
Example	@GVO ↵ @GVO,0,1,1,1 ↵	Getting video output connector. OUT1A: not output video. Other outputs: output video.
	@SVO,1,1 ↵ @SVO,1,1 ↵	Setting OUT1A to “Output”. Completed normally.
Remarks	―	

@GEN / @SEN	**HDCP output**	
Function	Getting	Setting
Format	@GEN ↵	@SEN, ch_1, hdcp_1 (, ch_2, hdcp_2･･･) ↵
Return value	@GEN, hdcp_1A, hdcp_1B (, hdcp_2A, hdcp_2B) ↵	@SEN, ch_1, hdcp_1 (, ch_2, hdcp_2･･･) ↵
Parameter	hdcp_1A / hdcp_2A : OUTA HDCP output hdcp_1B / hdcp_2B : OUTB HDCP output hdcp_1-4 : HDCP output 0 = HDCP is output only if input signals are with HDCP. 1 = HDCP is always output [Default], 2 = HDCP is not authorized	
	ch_1-4: Output connector 0 = All outputs, 1 = OUT1A, 2 = OUT1B, 3 = OUT2A, 4 = OUT2B	
Example	@GEN ↵ @GEN,1,1,1,0 ↵	Getting HDCP output. OUT2B: HDCP is output only if input signals are with HDCP. Other outputs: HDCP is always output.
	@SEN,1,1 ↵ @SEN,1,1 ↵	Setting OUT1A to output HDCP always. Completed normally.
Remarks	ー	

@GHR / @SHR	**The number of HDCP retries**	
Function	Getting	Setting
Format	@GHR ↵	@SHR, ch_1, retry_1 (, ch_2, retry_2･･･) ↵
Return value	@GHR, retry_1A, retry_1B (, retry_2A, retry_2B) ↵	@SHR, ch_1, retry_1 (, ch_2, retry_2･･･) ↵
Parameter	retry_1A / retry_2A : The number of retires (OUTA) retry_1B / retry_2B : The number of retires (OUTB) retry_1-4 : The number of retires -1 = Retry until succeed [Default], 0 = Not retry, 1 to 100 = Retry for desired number of retries	
	ch_1-4: Output connector 0 = All outputs, 1 = OUT1A, 2 = OUT1B, 3 = OUT2A, 4 = OUT2B	
Example	@GHR ↵ @GHR,-1,-1,-1,10 ↵	Getting the number of HDCP retires. OUT2B: Retry for up to 10 times Other outputs: continue to retry until succeed.
	@SHR,4,10 ↵ @SHR,4,10 ↵	Setting OUT2B to retry up to 10 times. Completed normally.
Remarks	ー	

@GDC / @SDC	**Deep Color**	
Function	Getting	Setting
Format	@GDC ↵	@SDC, ch_1, color_1 (, ch_2, color_2･･･) ↵
Return value	@GDC, color_1A, color_1B (, color_2A, color_2B) ↵	@SDC, ch_1, color_1 (, ch_2, color_2･･･) ↵
Parameter	color_1A / color_2A : OUTA color depth color_1B / color_2B : OUTB color depth out_1-4 : Color depth 0 = 24-BIT COLOR [Default], 1 = 30-BIT COLOR	
	ch_1-4: Output connector 0 = All outputs, 1 = OUT1A, 2 = OUT1B, 3 = OUT2A, 4 = OUT2B	
Example	@GDC ↵ @GDC,1,1,0,1 ↵	Getting color depth. OUT2A: 24-BIT COLOR other outputs: 30-BIT COLOR
	@SDC,1,0 ↵ @SDC,1,0 ↵	Setting OUT1A to 24-BIT COLOR. Completed normally.
Remarks	―	

@GCE / @SCE	**CEC connection**	
Function	Getting	Setting
Format	@GCE ↵	@SCE, ch_1, connect_1 (, ch_2, connect_2･･･) ↵
Return value	@GCE, connect_1A, connect_1B (, connect_2A, connect_2B) ↵	@SCE, ch_1, connect_1 (, ch_2, connect_2･･･) ↵
Parameter	connect_1A / connect_2A : OUTA CEC connection connect_1B / connect_2B : OUTB CEC connection connect_1-4 : CEC connection 0 = not connected [Default], 1 = selected video input channel, 2 = input channel1, 3 = input channel2, 4 = input channel3, 5 = input channel4	
	ch_1-4: Output connector 0 = All outputs, 1 = OUT1A, 2 = OUT1B, 3 = OUT2A, 4 = OUT2B	
Example	@GCE ↵ @GCE,4,0,0,0 ↵	Getting CEC connection. OUT1A: connecting to input channel3 Other outputs: not connected.
	@SCE,1,4 ↵ @SCE,1,4 ↵	Setting OUT1A CEC to connect input channel3. Completed normally.
Remarks	―	

@HAU	**HDCP re-authorization**	
Function	Setting	
Format	@HAU, ch_1 (, ch_2･･･) ↵	
Return value	@HAU, ch_1 (, ch_2･･･) ↵	
Parameter	ch_1-4: Output connector 0 = All outputs, 1 = OUT1A, 2 = OUT1B, 3 = OUT2A, 4 = OUT2B	
Example	@HAU,1 ↵ @HAU,1 ↵	Setting sink device HDCP of OUT1A to be re-authorized. Completed normally.
Remarks	―	

3.3.9 Audio

@GSL / @SSL	**Audio output level**	
Function	Getting	Setting
Format	@GSL ↵	@SSL, ch_1, level_1 (, ch_2, level_2) ↵
Return value	@GSL, level_1 (,level_2) ↵	@SSL, ch_1, level_1 (, ch_2, level_2) ↵
Parameter	level_1-2: Audio output level -60 to +10 [Default] ±0	
	ch_1-2: Output channel 0 = All outputs, 1 = OUT1, 2 = OUT2	
Example	@GSL ↵ @GSL,-4,0 ↵	Getting audio output level. OUT1: -4 dB; OUT2: ±0 dB
	@SSL,1,-4 ↵ @SSL,1,-4 ↵	Setting OUT1 audio output level to -4 dB. Completed normally.
Remarks	If you change the output level while muted, it will be unmuted.	

@SOL	**Relative value of audio output level**	
Function	Setting	
Format	@SOL, ch_1, updown_1 (, ch_2, updown_2) ↵	
Return value	@SOL, ch_1, updown_1 (, ch_2, updown_2) ↵	
Parameter	ch_1-2: Output channel 0 = All outputs, 1 = OUT1, 2 = OUT2	
	updown_1-2: setting relative value -70 to +70 The specified value is added to the current audio output level. If the total value exceeds the limit value (-60 to +10), the limit value will be applied.	
Example	@SOL,1,-1 ↵ @SOL,1,-1 ↵	Lower 1 dB of audio output level of OUT1. Completed normally.
Remarks	If you change the output level while muted, it will be unmuted.	

@GOL	**Limit status of audio output level**	
Function	Getting	
Format	@GOL ↵	
Return value	@GOL, out_1 (, out_2) ↵	
Parameter	out_1-2: Limit status of audio output level -1 = minimum settable value (-60 dB), 0 = not limit status, 1 = maximum settable value (+10 dB)	
Example	@GOL ↵ @GOL,1,0 ↵	Getting limit status of audio output level. OUT1: maximum settable value OUT2: not limit value
Remarks	—	

@GAM / @SAM	**Audio output mute**	
Function	Getting	Setting
Format	@GAM ↵	@SAM, ch_1, mute_1 (, ch_2, mute_2) ↵
Return value	@GAM, mute_1 (, mute_2) ↵	@SAM, ch_1, mute_1 (, ch_2, mute_2) ↵
Parameter	mute_1-2: Audio output mute 0 = Mute OFF [Default], 1 = Mute ON	
	ch_1-2: Output channel 0 = All outputs, 1 = OUT1, 2 = OUT2	
Example	@GAM ↵ @GAM,1,0 ↵	Setting audio output mute. OUT1: mute ON; OUT2: mute OFF
	@SAM,1,1 ↵ @SAM,1,1 ↵	Muting OUT1 audio output. Completed normally.
Remarks	ー	

@GAS / @SAS	**Selecting audio input**	
Function	Getting	Setting
Format	@GAS ↵	@SAS, ch_1, select_1 (, ch_2, select_2･･･) ↵
Return value	@GAS, select_1, select_2, select_3, select_4 (, select_5) ↵	@SAS, ch_1, select_1 (, ch_2, select_2･･･) ↵
Parameter	select_1-5: Audio input selection 0 = Automatic [Default], 1 = Analog audio, 2 = Digital audio	
	ch_1-5: Input channel 0 = All digital inputs, 1 = IN1 to 5 = IN5	
Example	@GAS ↵ @GAS,1,0,0,0,0 ↵	Getting audio input selection. IN1: analog audio is used Other inputs: automatic.
	@SAS,3,1 ↵ @SAS,3,1 ↵	Setting IN3 audio input to analog audio. Completed normally.
Remarks	Those commands are only for digital input. IN5 is available only when “1” (Digital signal). is selected for “**@GIN / @SIN**”.	

@GSD	**Selecting actual audio input**	
Function	Getting	
Format	@GSD ↵	
Return value	@GSD, in_1, in_2, in_3, in_4 (, in_5) ↵	
Parameter	in_1-5: Actual audio input selection 1 = analog audio [Default], 2 = digital audio	
Example	@GSD ↵ @GSD,1,2,2,2,2 ↵	Getting actual audio input selection. IN1: analog audio; other input: digital audio
Remarks	This command is only for digital input. IN5 is available only when “1” (Digital signal). is selected for “**@GIN / @SIN**”.	

@GSO / @SSO	**Audio input level**	
Function	Getting	Setting
Format	@GSO ↵	@SSO, ch_1, level_1 (, ch_2, level_2･･･) ↵
Return value	@GSO, level_1, level_2, level_3, level_4, level_5, level_6, level_7 ↵	@SSO, ch_1, level_1 (, ch_2, level_2･･･) ↵
Parameter	level_1-7: Audio input level -60 to ±0 [Default] ±0	
	ch_1-7: Input channel 0 = All inputs, 1 = IN1 to 7 = IN7	
Example	@GSO ↵ @GSO,0,0,0,0,-4,0,0 ↵	Getting audio input level. IN5: -4 dB; other inputs: ±0 dB.
	@SSO,5,-8 ↵ @SSO,5,-8 ↵	Setting IN5 audio input level to -8 dB. Completed normally.
Remarks	―	

@SIL	**Relative value of audio input level**	
Function	Setting	
Format	@SIL, ch_1, updown_1 (, ch_2, updown_2･･･) ↵	
Return value	@SIL, ch_1, updown_1 (, ch_2, updown_2･･･) ↵	
Parameter	ch_1-7: Input channel 0 = All inputs, 1 = IN1 to 7 = IN7	
	updown_1-7: Setting relative value -60 to +60 The specified value is added to the current audio input level. If the total value exceeds the limit value (-60 to +0), the limit value will be applied.	
Example	@SIL,1,-1 ↵ @SIL,1,-1 ↵	Lowering IN1 audio input level (1 dB). Completed normally.
Remarks	―	

@GIL	**Limit status of audio input level**	
Function	Getting	
Format	@GIL ↵	
Return value	@GIL, in_1, in_2, in_3, in_4, in_5, in_6, in_7 ↵	
Parameter	in_1-7: Limit status -1 = minimum settable value (-60 dB), 0 = not limit status, 1 = maximum settable value (+0 dB)	
Example	@GIL ↵ @GIL,1,0,0,0,0,0,0 ↵	Getting limit status of audio input level. IN1: maximum settable value Other inputs: not limit value
Remarks	―	

@GLO / @SLO	**Output lip sync**	
Function	Getting	Setting
Format	@GLO ↵	@SLO, ch_1, frame_1 (, ch_2, frame_2) ↵
Return value	@GLO, frame_1 (, frame_2) ↵	@SLO, ch_1, frame_1 (, ch_2, frame_2) ↵
Parameter	frame_1-2: Output lip sync 0 to 8 [Default] 0	
	ch_1-2: Output channel 0 = All outputs, 1 = OUT1, 2 = OUT2	
Example	@GLO ↵ @GLO,0,2 ↵	Getting lip sync of the output side.. OUT1: 0 frame; OUT2: 2 frames
	@SLO,1,2 ↵ @SLO,1,2 ↵	Setting OUT1 lip sync to 2 frames. Completed normally.
Remarks	―	

@GLY / @SLY	**Input lip sync**	
Function	Getting	Setting
Format	@GLY ↵	@SLY, ch_1, frame_1 (, ch_2, frame_2･･･) ↵
Return value	@GLY, frame_1, frame_2, frame_3, frame_4, frame_5, frame_6, frame_7 ↵	@SLY, ch_1, frame_1 (, ch_2, frame_2･･･) ↵
Parameter	frame_1-7: Input lip sync 0 to 8 [Default] 0	
	ch_1-7: Input channel 0 = All inputs, 1 = IN1 to 7 = IN7	
Example	@GLY ↵ @GLY,0,0,0,2,0,0,0 ↵	Getting lip sync of input side. IN4: 2 frames; other inputs: 0 frame
	@SLY,4,2 ↵ @SLY,4,2 ↵	Setting IN4 lip sync to 2 frames. Completed normally.
Remarks	―	

@GSF / @SSF	**Sampling frequency**	
Function	Getting	Setting
Format	@GSF ↵	@SSF, ch_1, frequency_1 (, ch_2, frequency_2) ↵
Return value	@GSF, frequency_1 (, frequency_2) ↵	@SSF, ch_1, frequency_1 (, ch_2, frequency_2) ↵
Parameter	frequency_1-2: Sampling frequency 0 = AUTO-A [Default], 1 = AUTO-B, 2 = 32 kHz, 3 = 44.1 kHz, 4 = 48 kHz, 5 = 88.2 kHz, 6 = 96 kHz, 7 = 192 kHz	
	ch_1-2: Output channel 0 = All outputs, 1 = OUT1, 2 = OUT2	
Example	@GSF ↵ @GSF,0,2 ↵	Getting sampling frequency settings. OUT1: AUTO-A; OUT2: 32 kHz
	@SSF,1,3 ↵ @SSF,1,3 ↵	Setting OUT1 sampling frequency to 44.1 kHz. Completed normally.
Remarks	ー	

@GFD	**Actual sampling frequency**	
Function	Getting	
Format	@GFD ↵	
Return value	@GFD, frequency_1 (, frequency_2) ↵	
Parameter	frequency_1-2: Sampling frequency 1 = 32 kHz, 2 = 44.1 kHz, 3 = 48 kHz [Default], 4 = 88.2 kHz, 5 = 96 kHz, 6 = 192 kHz	
Example	@GFD ↵ @GFD,5,3 ↵	Getting actual sampling frequency. OUT1: 96 kHz; OUT2: 48 kHz
Remarks	If "**@GSF / @SSFSampling frequency**" is set to "AUTO-A" or "AUTO-B", the sampling frequency that is output actually will be replied. If it is set to value other than "AUTO-A" or "AUTO-B", the set sampling frequency will be replied.	

@GDO / @SDO	**Audio output connector**	
Function	Getting	Setting
Format	@GDO ↵	@SDO, ch_1, out_1, (, ch_2, out_2) ↵
Return value	@GDO, out_1 (, out_2) ↵	@SDO, ch_1, out_1, (, ch_2, out_2) ↵
Parameter	out_1-2: Audio output connector 0 = Only to analog audio output connectors, 1 = To HDMI output and HDBaseT output connectors, 2 = To analog audio output connectors, HDMI output connectors, and HDBaseT output connectors [Default]	
	ch_1-2: Output channel 0 = All outputs, 1 = OUT1, 2 = OUT2	
Example	@GDO ↵ @GDO,0,1 ↵	Getting connectors that output audio. OUT1: only to analog audio output connectors; OUT2: only to HDMI output connector and HDBaseT output connector
	@SDO,1,0 ↵ @SDO,1,0 ↵	Setting OUT1 to output to only analog audio output connectors Completed normally.
Remarks	ー	

@GAO / @SAO	**Digital audio output connector**	
Function	Getting	Setting
Format	@GAO ↵	@SAO, ch_1, out_1 (, ch_2, out_2･･･) ↵
Return value	@GAO, out_1A, out_1B (, out_2A , out_2B) ↵	@SAO, ch_1, out_1 (, ch_2, out_2･･･) ↵
Parameter	out_1A / out_2A: OUTA digital audio output out_1B / out_2B: OUTB digital audio output out_1-4: digital audio output 0 = Not output, 1 = Output [Default]	
	ch_1-4: Output connectors 0 = All outputs, 1 = OUT1A, 2 = OUT1B, 3 = OUT2A, 4 = OUT2B	
Example	@GAO ↵ @GAO,1,1,1,0 ↵	Getting connectors that output digital audio. OUT2B: Not output digital audio. Other outputs: Output digital audio.
	@SAO,1,0 ↵ @SAO,1,0 ↵	OUT1A: not output digital audio. Completed normally.
Remarks	ー	

@GMD / @SMD	**Multi channel audio output**	
Function	Getting	Setting
Format	@GMD ↵	@SMD, ch_1, out_1 (, ch_2, out_2) ↵
Return value	@GMD, out_1 (, out_2) ↵	@SMD, ch_1, out_1 (, ch_2, out_2) ↵
Parameter	out_1-2: Multi channel audio output 0 = CH1 / CH2 STEREO, 1 = CH3 / CH4 STEREO, 2 = CH5 / CH6 STEREO, 3 = CH7 / CH8 STEREO, 4 = CH1 / CH2 MONO, 5 = CH3 / CH4 MONO, 6 = CH5 / CH6 MONO, 7 = CH7 / CH8 MONO, 8 = DOWN MIX [Default]	
	ch_1-2: Output channel 0 = All outputs, 1 = OUT1, 2 = OUT2	
Example	@GMD ↵ @GMD,4,8 ↵	Getting multi channel audio output. OUT1: outputs monaural audio of CH1 / CH2. OUT2: outputs downmixed audio.
	@SMD,1,8 ↵ @SMD,1,8 ↵	Setting OUT1 to output down mixed audio. Completed normally.
Remarks	—	

@GAT / @SAT	**Test tone**	
Function	Getting	Setting
Format	@GAT ↵	@SAT, ch_1, tone_1, speaker_1 (, ch_2, tone_2, speaker_2) ↵
Return value	@GAT, tone_1, speaker_1 (, tone_2, speaker_2) ↵	@SAT, ch_1, tone_1, speaker_1 (, ch_2, tone_2, speaker_2) ↵
Parameter	tone_1-2: Test tone 0 = OFF [Default], 1 = 1kHz, 2 = 400Hz	
	speaker_1-2: Speaker 0 = ALL [Default], 1 = FRONT L/R, 2 = REAR L/R, 3 = REAR L/R CENTER, 4 = FRONT LEFT, 5 = FRONT RIGHT, 6 = LOW FREQUENCY EFFECT, 7 = FRONT CENTER, 8 = REAR LEFT, 9 = REAR RIGHT, 10 = REAR LEFT CENTER, 11 = REAR RIGHT CENTER	
	ch_1-2: Output channel 0 = All outputs, 1 = OUT1, 2 = OUT2	
Example	@GAT ↵ @GAT,2,1,0,0 ↵	Getting test tone output settings. OUT1: outputs test tone (400 Hz) to FRONT L/R. OUT2: not output test tone.
	@SAT,1,1,0 ↵ @SAT,1,1,0 ↵	Setting OUT1: outputs test tone (1k Hz) to all speakers. Completed normally.
Remarks	—	

3.3.10 EDID

@GED / @SED	**EDID data**	
Function	Getting	Setting
Format	@GED ↵	@SED, ch_1, edid_1 (, ch_2, edid_2･･･) ↵
Return value	@GED, edid_1, edid_2, edid_3, edid_4 (, edid_5) ↵	@SED, ch_1, edid_1 (, ch_2, edid_2･･･) ↵
Parameter	edid_1-5: EDID data 0 = Built-in EDID [Default], 1 = OUT1A MONITOR, 2 = OUT1B MONITOR, 3 = OUT2A MONITOR, 4 = OUT2B MONITOR, 101 to 108 = COPY DATA 1 to COPY DATA 8	
	ch_1-3: Input channel 0 = All digital inputs, 1 = IN1 to 5 = IN5	
Example	@GED ↵ @GED,0,0,0,3,0 ↵	Getting EDID data. IN4: EDID of the sink device connected to OUT2A. Other inputs: built-in EDID
	@SED,2,3 ↵ @SED,2,3 ↵	Setting IN2: EDID read from the sink device connected to OUT2A. Completed normally.
Remarks	Those commands are only for digital input. IN5 is available only when “1” (Digital signal). is selected for “**@GIN / @SIN**”.In order to use a copied data, read EDID data from the sink device in “**@RME Copying EDID (P.65)**” in advance.	

@GVF / @SVF	**Input resolution for PC**	
Function	Getting	Setting
Format	@GVF ↵	@SVF, ch_1, resolution_1 (, ch_2, resolution_2･･･) ↵
Return value	@GVF, resolution_1, resolution_2, resolution_3, resolution_4, resolution_5, resolution_6, resolution_7 ↵	@SVF, ch_1, resolution_1 (, ch_2, resolution_2･･･) ↵
Parameter	resolution_1-5: Input resolution for PC 0 = SVGA(800x600), 1 = XGA(1024x768), 2 = 720p(1280x720), 3 = WXGA(1280x768), 4 = WXGA(1280x800), 5 = QuadVGA(1280x960), 6 = SXGA(1280x1024), 7 = WXGA(1360x768), 8 = WXGA(1366x768), 9 = SXGA+(1400x1050), 10 = WXGA+(1440x900), 11 = WXGA++(1600x900), 12 = UXGA(1600x1200), 13 = WSXGA+(1680x1050), 14 = 1080i(1920x1080), 15 = 1080p(1920x1080), 16 = WUXGA(1920x1200), 17 = QWXGA(2048x1152) [Default] IN1 to IN5: 1080p (1920x1080); IN6 to IN7: UXGA (1600x1200)	
	ch_1-7: Input channel 0 = All inputs, 1 = IN1 to 7 = IN7	
Example	@GVF ↵ @GVF,6,6,9,6,6,6,6 ↵	Getting input resolution for PC. IN3: SXGA+; other inputs: SXGA.
	@SVF,0,12 ↵ @SVF,0,12 ↵	Setting EDID of all input channels to UXGA. Completed normally.
Remarks	ー	

@GHF / @SHF	**Input resolution for AV devices**	
Function	Getting	Setting
Format	@GHF ↵	@SHF, ch_1, resolution_1 (, ch_2, resolution_2･･･) ↵
Return value	@GHF, resolution_1, resolution_2, resolution_3, resolution_4 (, resolution_5) ↵	@SHF, ch_1, resolution_1 (, ch_2, resolution_2･･･) ↵
Parameter	resolution_1-5: Input resolution for AV devices 0 = UNUSED, 1 = 480p, 2 = 720p, 3 = 1080i, 4 = 1080p, 5 = AUTO [Default]	
	ch_1-5: Input channel 0 = All digital inputs, 1 = IN1 to 5 = IN5	
Example	@GHF ↵ @GHF,5,5,5,4,5 ↵	Getting input resolution for AV devices. IN4: 1080p; other inputs: AUTO
	@SHF,0,4 ↵ @SHF,0,4 ↵	Setting EDIDs of all input channels to 1080p. Completed normally.
Remarks	This command is only for digital input. IN5 is available only when “1” (Digital signal). is selected for “**@GIN / @SIN**”.	

@GDI / @SDI	**Deep Color input**	
Function	Getting	Setting
Format	@GDI ↵	@SDI, ch_1, color_1 (, ch_2, color_2･･･) ↵
Return value	@GDI, color_1, color_2, color_3, color_4 (, color_5) ↵	@SDI, ch_1, color_1 (, ch_2, color_2･･･) ↵
Parameter	color_1-5: Color depth 0 = 24-BIT COLOR [Default], 1 = 30-BIT COLOR	
	ch_1-5: Input channel 0 = All digital inputs, 1 = IN1 to 5 = IN5	
Example	@GDI ↵ @GDI,1,1,1,0,1 ↵	Getting color depth. IN4: 24-BIT COLOR Other inputs: 30-BIT COLOR.
	@SDI,4,0 ↵ @SDI,4,0 ↵	Setting IN4 color depth to 24-BIT COLOR. Completed normally.
Remarks	This command is only for digital input. IN5 is available only when “1” (Digital signal). is selected for “**@GIN / @SIN**”.	

<table>
<tr><th>@GAF / @SAF</th><th colspan="2">Audio format</th></tr>
<tr><td>Function</td><td>Getting</td><td>Setting</td></tr>
<tr><td>Format</td><td>@GAF, ch ↵</td><td>@SAF, ch, format_1, frequency_1
(, format_2, frequency_2･･･) ↵</td></tr>
<tr><td>Return value</td><td>@GAF, ch, format_1, frequency_1
(, format_2, frequency_2･･･) ↵</td><td>@SAF, ch, format_1, frequency_1
(, format_2, frequency_2･･･) ↵</td></tr>
<tr><td rowspan="4">Parameter</td><td colspan="2">ch: Input channel
0 = All digital inputs (only for setting), 1 = IN1 to 5 = IN5</td></tr>
<tr><td colspan="2">format_1-7: Audio format
0 = PCM, 1 = Dolby Digital, 2 = AAC,
3 = Dolby Digital+, 4 = DTS, 5 = DTS-HD,
6 = Dolby TrueHD
[Default]: only PCM can be output</td></tr>
<tr><td colspan="2">frequency_1-7: Maximum sampling frequency
0 = Output disabled, 1 = 32 kHz, 2 = 44.1 kHz, 3 = 48 kHz,
4 = 88.2 kHz, 5 = 96 kHz, 6 = 176.2 kHz, 7 = 192 kHz
[Default] DTS-HD: 192 kHz, Dolby TrueHD: 96 kHz, others: 48 kHz
“Output disabled”: only set commands can be specified.
Maximum settable sampling frequency depends on the audio format.
<table>
<tr><th>Audio format</th><th>Maximum sampling frequency (kHz)</th></tr>
<tr><td>PCM</td><td>32 / 44.1 / 48 / 88.2 / 96 / 176.4 / 192</td></tr>
<tr><td>Dolby Digital</td><td>Output disabled / 32 / 44.1 / 48</td></tr>
<tr><td>AAC</td><td>Output disabled / 32 / 44.1 / 48 / 88.2 / 96</td></tr>
<tr><td>Dolby Digital+</td><td>Output disabled / 32 / 44.1 / 48</td></tr>
<tr><td>DTS</td><td>Output disabled / 32 / 44.1 / 48 / 96</td></tr>
<tr><td>DTS-HD</td><td>Output disabled / 44.1 / 48 / 88.2 / 96 / 176.4 / 192</td></tr>
<tr><td>Dolby TrueHD</td><td>Output disabled / 44.1 / 48 / 88.2 / 96 / 176.4 / 192</td></tr>
</table></td></tr>
<tr><td colspan="2">For get commands, the set audio formats and maximum sampling frequency will be replied.
By sending target parameters, the other parameters will be set to “0” (Output disabled) automatically. You do not need to specify “0” parameter normally.
PCM is always enabled, you can skip this menu unless you need to change the sampling frequency.</td></tr>
<tr><td rowspan="2">Example</td><td>@GAF,1 ↵
@GAF,1,0,7 ↵</td><td>Getting audio formats of IN1 that are allowed to be output.
Up to 192 kHz of PCM.</td></tr>
<tr><td>@SAF,2,4,3 ↵

@SAF,2,4,3 ↵</td><td>Enable IN2 to output Linear PCM and DTS 32, 44.1, and 48 kHz (Sampling frequency of PCM is not changed).
Completed normally.</td></tr>
<tr><td>Remarks</td><td colspan="2">This command is only for digital input.
IN5 is available only when “1” (Digital signal). is selected for “@GIN / @SIN”.</td></tr>
</table>

@GSP / @SSP	**The number of speakers**	
Function	Getting	Setting
Format	@GSP, ch ↵	@SSP, ch, number (, speaker_1, speaker_2･･･) ↵
Return value	@GSP, ch, number, speaker_1 (, speaker_2･･･) ↵	@SSP, ch, number (, speaker_1, speaker_2･･･) ↵
Parameter	ch: Input channel 0 = All digital inputs, 1 = IN1 to 5 = IN5 “All digital inputs”: only setting commands can be specified.	
	number: The number of speakers 1 to 8 [Default] 2	
	speaker_1-8: Speaker configuration 0 = Front Left / Right [Default], 1 = Low Frequency Effect, 2 = Front Center, 3 = Rear Left / Right, 4 = Rear Center, 5 = Front Left / Right Center, 6 = Rear Left / Right Center, 7 = Front Left / Right Wide, 8 = Front Left / Right High, 9 = Top Center, 10 = Front Center High	
	Getting command: the number of speakers and which speakers will be used will be replied. Setting command: if you do not specify the speaker configuration, the following configuration will be applied depending on the set number of speakers.	

number	speaker										
	0	1	2	3	4	5	6	7	8	9	10
1	OFF	OFF	ON	OFF	OFF	OFF	OFF	OFF	OFF	OFF	OFF
2	ON	OFF	OFF	OFF	OFF	OFF	OFF	OFF	OFF	OFF	OFF
3	ON	ON	OFF	OFF	OFF	OFF	OFF	OFF	OFF	OFF	OFF
4	ON	ON	ON	OFF	OFF	OFF	OFF	OFF	OFF	OFF	OFF
5	ON	ON	OFF	ON	OFF	OFF	OFF	OFF	OFF	OFF	OFF
6	ON	ON	ON	ON	OFF	OFF	OFF	OFF	OFF	OFF	OFF
7	ON	ON	ON	ON	ON	OFF	OFF	OFF	OFF	OFF	OFF
8	ON	ON	ON	ON	OFF	OFF	ON	OFF	OFF	OFF	OFF

If you specify *speaker*_1-8 and the *number* and total number of speakers (*speaker*_1-8) do not match, the *number* is set automatically. In case the *number* exceeds the settable range, an error is replied.

Example	@GSP,1 ↵ @GSP,1,6,0,1,2,3 ↵	Getting IN1 speaker configuration. Six speakers (Front Left / Right, Low Frequency Effect, Front Center, Rear Left / Right) are used.
	@SSP,2,8 ↵ @SSP,2,8 ↵	Setting IN2 speaker configuration to Front Left / Right, Low Frequency Effect, Front Center, Rear Left / Right, Rear Left / Right Center (eight speakers). Completed normally.

@GSP / @SSP	**The number of speakers**	
Example	@SSP,3,8,0,3,5,6,7 ↵ @ERR,1 ↵	Setting IN3 speaker configuration to Front Left / Right, Rear Left / Right, Front Left / Right Center, Rear Left / Right Center, Front Left / Right Wide. The number of speakers is 10 which exceeds the settable value.
Remarks	This command is only for digital input..	

@RME	**Copying EDID**	
Function	Setting	
Format	@RME, out, number (, name) ↵	
Return value	@RME, out, number (, name) ↵	
Parameter	out: Connector to be loaded 1 = OUT1A, 2 = OUT1B, 3 = OUT2A, 4 = OUT2B	
	number: Destination COPY DATA number 1 to 8	
	name: Name of COPY DATA Up to 10 characters using 20 to 7D from ASCII codes. You can skip this setting. In this case, only EDID settings are saved without changing currently saved name.	
Example	@RME,1,1 ↵ @RME,1,1 ↵	Loading EDID data of the sink device connected to OUT1A and saving it in COPY DATA 1. Completed normally.
	@RME,3,4,800x600 ↵ @RME,3,4,800x600 ↵	Loading EDID data of the sink device connected to OUT2A, naming it “800x600” and saving it in COPY DATA 4. Completed normally.
Remarks	**@GED / @SED EDID (P.60)**	

3.3.11 RS-232C communication

@GCT / @SCT	**RS-232C communication**	
Function	Getting	Setting
Format	@GCT ↵	@SCT, port, setting ↵
Return value	@GCT, rs_232c, out_1B (, out_2B) ↵	@SCT, port, setting ↵
Parameter	rs_232c: Communication settings of RS-232C connector out_1B: Communication settings of OUT1B connector out_2B: Communication settings of OUT2B connector setting: Communication settings ・Baud rate (4800, 9600, 19200, 38400 [bps] [Default] 9600) ・Data length (8, 7 [bit] [Default] 8) ・Parity check (NONE, EVEN, ODD [Default]: NONE) ・Stop bit (1, 2 [bit] [Default] 1) For setting values, see the table below.	
	port: Connector 0 = All connectors, 1 = RS-232C connector, 2 = OUT1B connector, 3 = OUT2B connector	
Example	@GCT ↵ @GCT,24,24,24 ↵	Getting communication settings of RS-232C. All baud rates = 19200 [bps], data bit length = 8 [bit], parity check = None, stop bit = 1 [bit]
	@SCT,1,24 ↵ @SCT,1,24 ↵	Setting RS-232C connector as follows: baud rate =19200 [bps], data bit length = 8 [bit], parity check = NONE, stop bit = 1 [bit]. Completed normally.
Remarks	Once IP address or RS-232C communication setting is changed, the communication may be disabled. Change the environmental settings of communication based on the MSD settings.	

[Table 3.1] Parameter of RS-232C communication settings

Value	Communication			
0	4800	8	NONE	1
1	4800	8	NONE	2
2	4800	8	ODD	1
3	4800	8	ODD	2
4	4800	8	EVEN	1
5	4800	8	EVEN	2
6	4800	7	NONE	1
7	4800	7	NONE	2
8	4800	7	ODD	1
9	4800	7	ODD	2
10	4800	7	EVEN	1
11	4800	7	EVEN	2

Value	Communication			
12	9600	8	NONE	1
13	9600	8	NONE	2
14	9600	8	ODD	1
15	9600	8	ODD	2
16	9600	8	EVEN	1
17	9600	8	EVEN	2
18	9600	7	NONE	1
19	9600	7	NONE	2
20	9600	7	ODD	1
21	9600	7	ODD	2
22	9600	7	EVEN	1
23	9600	7	EVEN	2

Value	Communication			
24	19200	8	NONE	1
25	19200	8	NONE	2
26	19200	8	ODD	1
27	19200	8	ODD	2
28	19200	8	EVEN	1
29	19200	8	EVEN	2
30	19200	7	NONE	1
31	19200	7	NONE	2
32	19200	7	ODD	1
33	19200	7	ODD	2
34	19200	7	EVEN	1
35	19200	7	EVEN	2

Value	Communication			
36	38400	8	NONE	1
37	38400	8	NONE	2
38	38400	8	ODD	1
39	38400	8	ODD	2
40	38400	8	EVEN	1
41	38400	8	EVEN	2
42	38400	7	NONE	1
43	38400	7	NONE	2
44	38400	7	ODD	1
45	38400	7	ODD	2
46	38400	7	EVEN	1
47	38400	7	EVEN	2

@GCF / @SCF	**RS-232C communication mode**	
Function	Getting	Setting
Format	@GCF ↵	@SCF, mode ↵
Return value	@GCF, mode ↵	@SCF, mode ↵
Parameter	mode: Operation mode 0 = RECEIVER mode [Default], 1 = TRANSMITTER mode	
Example	@GCF ↵ @GCF,1 ↵	Getting operation mode of RS-232C. RS-232C connector: Transmitter mode
	@SCF,1 ↵ @SCF,1 ↵	Setting RS-232C connector to transmitter mode. Completed normally.
Remarks	Those commands are only for RS-232C connector. Once IP address or RS-232C communication setting is changed, the communication may be disabled. Change the environmental settings of communication based on the MSD settings.	

@GCD / @SCD	**RS-232C transmission between control devices**	
Function	Getting	Setting
Format	@GCD ↵	@SCD, mode ↵
Return value	@GCD, mode ↵	@SCD, mode ↵
Parameter	mode:RS-232C transmission 0 = OFF [Default], RS-232C connector operates in the mode set in "**@GCF / @SCF RS-232C communication mode (P.67)**". 1 = OUT1B connector, 2 = OUT2B connector Enabling communication between the RS-232C connector of the MSD and the RS-232C connector of an HDC series receiver that is connected to OUT1B or OUT2B connector. The RS-232C connector cannot be used for communication command control from a PC to the MSD and control command output from the MSD to an external device.	
Example	@GCD ↵ @GCD,0 ↵	Getting RS-232C transmission. RS-232C connector operates in the mode set in "**@GCF / @SCF RS-232C communication mode"**.
	@SCD,1 ↵ @SCD,1 ↵	Enabling communication between the RS-232C connector of the MSD and the RS-232C connector of an HDC series receiver that is connected to OUT1B connector. Completed normally.
Remarks	For RS-232C transmission, set the same values for communication settings of the external device's (such as PCs) transistor and receiver sides.	

3.3.12 LAN communication

@GIP / @SIP	**IP address**	
Function	Getting	Setting
Format	@GIP ↵	@SIP, unit_1, unit_2, unit_3, unit_4 ↵
Return value	@GIP, unit_1, unit_2, unit_3, unit_4 ↵	@SIP, unit_1, unit_2, unit_3, unit_4 ↵
Parameter	unit_1: Upper bit of the IP address to unit_4: lower bit of the IP address 0 to 255 = 8 bit (Decimal notation) [Default] 192.168.1.199	
Example	@GIP ↵ @GIP,192,168,3,2 ↵	Getting IP address of the MSD. IP address: 192.168.3.2.
	@SIP,192,168,3,2 ↵ @SIP,192,168,3,2 ↵	Setting IP address to 192.168.3.2. Completed normally.
Remarks	Once IP address or RS-232C communication setting is changed, the communication may be disabled. Change the environmental settings of communication based on the MSD settings.	

@GSB / @SSB	**Subnet mask**	
Function	Getting	Setting
Format	@GSB ↵	@SSB, unit_1, unit_2, unit_3, unit_4 ↵
Return value	@GSB, unit_1, unit_2, unit_3, unit_4 ↵	@SSB, unit_1, unit_2, unit_3, unit_4 ↵
Parameter	unit_1: Upper bit of the subnet mask to unit_4: lower bit of the subnet mask 0 to 255 = 8 bit (Decimal notation) [Default] 255.255.255.0	
Example	@GSB ↵ @GSB,255,255,192,0 ↵	Getting subnet mask of the MSD. 255.255.192.0 (= 18 bit) .
	@SSB,255,255,192,0 ↵ @SSB,255,255,192,0 ↵	Setting subnet mask to 255.255.192.0 (=18 bit). Completed normally.
Remarks	Once IP address or RS-232C communication setting is changed, the communication may be disabled. Change the environmental settings of communication based on the MSD settings.	

@GGW / @SGW	**Gateway address**	
Function	Getting	Setting
Format	@GGW ↵	@SGW, unit_1, unit_2, unit_3, unit_4 ↵
Return value	@GGW, unit_1, unit_2, unit_3, unit_4 ↵	@SGW, unit_1, unit_2, unit_3, unit_4 ↵
Parameter	unit_1: Upper bit of the gateway address to unit_4: lower bit of the gateway address 0 to 255 = 8 bit (Decimal notation) [Default] 192.168.1.200	
Example	@GGW ↵ @GGW,192,168,1,254 ↵	Getting gateway address. 192.168.1.254.
	@SGW,192,168,1,254 ↵ @SGW,192,168,1,254 ↵	Setting gateway address to 192.168.1.254. Completed normally.
Remarks	Once IP address or RS-232C communication setting is changed, the communication may be disabled. Change the environmental settings of communication based on the MSD settings.	

@GLF / @SLF	**LAN communication mode**	
Function	Getting	Setting
Format	@GLF, connection ↵	@SLF, connection, mode (, ip_1, ip_2, ip_3, ip_4, pjlink, tcp, password) ↵
Return value	@GLF, connection, mode (, ip_1, ip_2, ip_3, ip_4, pjlink, tcp, password) ↵	@SLF, connection, mode (, ip_1, ip_2, ip_3, ip_4, pjlink, tcp, password) ↵
Parameter	connection: Connection number 1 = connection 1 to 8 = connection 8	
	mode: Operation mode 0 = RECEIVER mode [Default], 1 = TRANSMITTER mode	
	ip_1: Upper bit of the destination IP address to ip_4: lower bit of the destination IP address 0 to 255 = 8 bit (Decimal notation) [Default] 192.168.1.198 Replied/Set only if the *mode* is TRANSMITTER.	
	pjlink: PJLink protocol connection 0 = PJLink not used [Default], 1 = PJLink used Replied/Set only if the *mode* is TRANSMITTER.	
	tcp: Destination port number 1 to 65535 [Default] 1100 Replied/Set only if the *mode* is “1” (TRANSMITTER) and *pjlink* is “0” (PJLink not used). For PJLink protocol connection, the port number is “4352” (static).	
	password: Password of PJLink protocol Up to 32 characters of the following ASCII codes: 20, 30 to 39, 41 to 5A, 61 to 7A (alphanumeric characters). [Default] All: 20 (space) Replied/Set only if the *mode* is “1” (TRANSMITTER) and *pjlink* is “0” (PJLink not used). For get commands, replied only if the password is set. For set commands, you can skip this password setting if you disable password authentication for PJLink protocol connection.	
Example	@GLF,3 ↵ @GLF,3,1,192,168,1,2,1,PROJECTOR1 ↵	Getting operation mode of connection 3. Mode = transmitter mode; destination IP address = 192.168.1.2; PJLink = to be used; password = “PROJECTOR1”
	@SLF,3,1,192,168,1,2,1 ↵ @SLF,3,1,192,168,1,2,1 ↵	Setting connection 3 as follows: Mode = transmitter mode; destination IP address = 192.168.1.2; PJLink = to be used; password = disabling password authentication. Completed normally.
Remarks	Once IP address or RS-232C communication setting is changed, the communication may be disabled. Change the environmental settings of communication based on the MSD settings.	

@GLP / @SLP	**TCP port number**	
Function	Getting	Setting
Format	@GLP ↵	@SLP, connection_1, port_1 (, connection_2, port_2･･･) ↵
Return value	@GLP, port_1, port_2, port_3, port_4, port_5, port_6, port_7, port_8 ↵	@SLP, connection_1, port_1 (, connection_2, port_2･･･) ↵
Parameter	port_1-8: TCP port number 23, 80, 1100, 5000 to 5999, 6000 to 6999 [Default] Connection 1 to 3 = 1100, Connection 4 to 6 = 23, Connection 7 to 8 = 80	
	connection_1-8: Connection number 0 = All connections, 1 = Connection 1 to 8 = connection 8	
Example	@GLP ↵ @GLP,1100,1100,1100,23,23,23,80,80 ↵	Getting port number. Connection 1 to 3:1100; connection 4 to 6: 23; connection 7 and 8: 80
	@SLP,8,6000 ↵ @SLP,8,6000 ↵	Setting port number of connection 8 to “6000”. Completed normally.
Remarks	Once IP address or RS-232C communication setting is changed, the communication may be disabled. Change the environmental settings of communication based on the MSD settings.	

@GMC	**MAC address**	
Function	Getting	
Format	@GMC ↵	
Return value	@GMC, unit_1, unit_2, unit_3, unit_4, unit_5, unit_6 ↵	
Parameter	unit_1: Upper bit of the MAC address to unit_6: lower bit of the MAC address 00 to FF = 8 bit (in hexadecimal)	
Example	@GMC ↵ @GMC,00,08,E5,5F,00,00 ↵	Getting MAC address. The MAC address is replied.
Remarks	―	

3.3.13 Control commands

@EXC	**Executing control commands**	
Function	Set	
Format	@EXC, command_1 (, command_2･･･) ↵	
Return value	@EXC, command_1 (, command_2･･･) ↵	
Parameter	command_1-5: Control command 1 = COMMAND 1 to 32 = COMMAND 32	
Example	@EXC,1,2,3 ↵ @EXC,1,2,3 ↵	Executing COMMAND 1→2→3 in order. Completed normally.
	@EXC,6 ↵ @EXC,6,RECV: POWER OFF ↵	Executing COMMAND 6. If a command to display received data is executed, the received result will be replied. In this example, “POWER OFF” is replied from the target device.
Remarks	Because the result is replied after control command execution, it sometimes may take a long time for the reply.	

@GEC / @SEC	**Getting control command (Communication command control)**	
Function	Getting	Setting
Format	@GEC, no ↵	@SEC, no, delay, port, memo, length, command, timeout, retry, interval, retry over, display (, recv_1, recv_2･･･) ↵
Return value	@GEC, no, delay, port, memo, length, command, timeout, retry, interval, retryover, display (, recv_1, recv_2･･･) ↵	@SEC, no, delay, port, memo, length, command, timeout, retry, interval, retryover, display (, recv_1, recv_2･･･) ↵
Parameter	no: Control command number 1 to 32	
	delay: Delay time 0 = 0 to 999999 = 999.999 seconds	
	port: Output port 1 to 4095	

bit	7	6	5	4	3	2	1	0
port	LAN 5	LAN 4	LAN 3	LAN 2	LAN 1	RS-232C OUT2B	RS-232C OUT1B	RS-232C

bit	15	14	13	12	11	10	9	8
port	—	—	—	—	LOOP BACK	LAN 8	LAN 7	LAN 6

“1” is for the bit of the output port to send a command (Since bit 12-15 are not used, they are always “0”). For example, if you want to send a command to RS-232C, specify “1”(0000000000000001 in binary). If sending a command to LAN 1, specify “8” (0000000000001000 in binary).

@GEC / @SEC	**Getting control command (Communication command control)**	
Parameter	memo: Memo Up to 14 characters of 20 to 7D except 2C (,).	
	length: Data size of send command (the number of bytes) 0 to 30	
	command: Send command data Specify *length* × 2 digits with 0 to 9, A to F, a to f: (4 bit per digit in hexadecimal).	
	timeout: Time-out time 0 = 0 second to 99999 = 99.999 seconds	
	retry: The number of retries 0 to 99	
	interval: The number of retries 0 = 0 second to 99999 = 99.999 seconds	
	retryover: Processing at retry timeout 0 = Stop processing, 1 = Continue processing	
	display: Displaying received data 0 = communication command control	
	recv_1-32: Checking replied command check 1 to 32 For get commands, reply command numbers are separated from each other by a comma. For set commands, the reply command number to be checked can be specified. Up to 32 commands can be specified by separating them by a comma. If you send only parameters of reply command number you want to check, the reply commands without sent parameter are automatically set to “Not check”. Register reply commands in **“@GRC / @SRCReply command (P.77)”**.	
Example	@GEC,1 ↵ @GEC,1,10,1,POWER,7,505720 4F4E0D0A, 1000,2,500,0,0,1,2 ↵	Getting settings registered in control command 1. ・Delay: 10 ms. ・Output port: RS-232C ・Memo: POWER ・Data size: 7 bytes ・Command data : PW ON *CR LF* (ASCII codes) ・Timeout: 1000 ms. ・Retry: 2 times ・Retry interval: 500 ms. ・Retry over: Stop ・Received data: Not displayed ・Replied command: Check 1 and 2

@GEC / @SEC	**Getting control command (Communication command control)**	
Example	@SEC,2,0,2048,IN1 SELECT,10, 405353572C312C310D0A,0,0,0, 1,0 ↵ @SEC,2,0,2048,IN1 SELECT,10, 405353572C312C310D0A,0,0,0, 1,0 ↵	Setting control command 2 as follows: ・Delay: 0 ms. ・Output port: LOOP BACK ・Memo: IN1 SELECT ・Data size: 10 bytes ・Command data: @SSW,1,1 CR LF (ASCII codes) ・Timeout: 0 ms. ・Retry: 0 time ・Interval: 0 ms. ・Retry over: Execute ・Received data: Not displayed ・Reply command: Not checked
Remarks	—	

@GEC / @SEC	**Control command (Displaying received data)**	
Function	Getting	Setting
Format	@GEC, no ↵	@SEC, no, delay, port, memo, length, command, timeout, retry, interval, retryover, display, delimiter ↵
Return value	@GEC, no, delay, port, memo, length, command, timeout, retry, interval, retryover, display, delimiter ↵	@SEC, no, delay, port, memo, length, command, timeout, retry, interval, retryover, display, delimiter ↵
Parameter	No: Control command number 1 to 32	
	delay: Delay time 0 = 0 second to 999999 = 999.999 seconds	
	port: Output port 1 to 4095	

bit	7	6	5	4	3	2	1	0
port	LAN 5	LAN 4	LAN 3	LAN 2	LAN 1	RS-232C OUT2B	RS-232C OUT1B	RS-232C

bit	15	14	13	12	11	10	9	8
port	—	—	—	—	LOOP BACK	LAN 8	LAN 7	LAN 6

"1" is for the bit of the output port to send a command (Since bit 12-15 are not used, they are always "0"). For example, if you want to send a command to RS-232C, specify "1"(0000000000000001 in binary). If sending a command to LAN 1, specify "8" (0000000000001000 in binary).

@GEC / @SEC	**Control command (Displaying received data)**	
Parameter	memo: Up to 14 characters of 20 to 7D except 2C (,) from ASCII codes.	
	Length: Send command data size (the number of bites) 0 to 30	
	command: Send command data Specify length × 2 digits with 0 to 9, A to F, a to f = 4 bit per digit (in hexadecimal)	
	timeout: 0 = 0 second to 99999 = 99.999 seconds	
	retry: The number of retires 0 to 99	
	interval: Retry interval 0 = 0 second to 99999 = 99.999 seconds	
	retryover: Processing at retry timeover 0 = Stop processing, 1 = Continue processing	
	display: Displaying received data 1 = in ASCII codes, 2 = in hexadecimals	
	delimiter: 2 digits of 0 to 9, A to F, a to f = 4 bit per digit (in hexadecimal) for monitoring delimiter 100 = Not monitor	
Example	@GEC,3 ↵ @GEC,3,0,8,POWER STATUS,9, 47455420504F570D0A, 2000,2,200,0,1,0D ↵	Getting settings of control command 3. ・Delay time: 0 ms. ・Output port: LAN1 ・Memo: POWER STATUS ・Data size: 9 bytes ・Command data: GET POW CR LF (ASCII codes) ・Timeout: 2000 ms. ・Retry: 2 times ・Retry interval: 200 ms. ・Retryover: Stop ・Received data: Displayed in ASCII codes ・Delimiter: 0D in hex (CR =ASCII codes)

@GEC / @SEC	**Control command (Displaying received data)**	
Example	@SEC,3,0,8,POWER STATUS,9, 47455420504F570D0A, 2000,2,200,0,1,0D ↵ @SEC,3,0,8,POWER STATUS,9, 47455420504F570D0A, 2000,2,200,0,1,0D ↵	Setting control command 3 as follows: ・Delay time: 0 ms. ・Output port: LAN1 ・Memo: POWER STATUS ・Data size: 9 bytes ・Command data: GET POW CR LF (ASCII codes) ・Timeout: 2000 ms. ・Retry: 2 times ・Retry interval: 200 ms. ・Retryover: Stop ・Received data: Displayed in ASCII codes ・Delimiter: 0D in hex (CR =ASCII codes)
Remarks	―	

@GEC / @SEC	**Control command (CEC control)**	
Function	Getting	Setting
Format	@GEC, no ↵	@SEC, no, delay, port, memo, error, ch_1, cec_1 (, ch_2, cec_2･･･) ↵
Return value	@GEC, no, delay, port, memo, error, ch_1, cec_1 (, ch_2, cec_2･･･) ↵	@SEC, no, delay, port, memo, error, ch_1, cec_1 (, ch_2, cec_2･･･) ↵
Parameter	no: Control command number 1 to 32	
	delay: Delay time 0 = 0 second to 999999 = 999.999 seconds	
	port: CEC control For 4096 = CEC control, the value is 4096.	
	memo: Up to 14 characters of 20 to 7D except 2C (,) from ASCII codes.	
	error: Processing at no response from the device 0 = Stop processing, 1 = Continue processing	
	ch_1-4: Output connector 1 = OUT1A, 2 = OUT1B, 3 = OUT2A, 4=OUT2B	
	cec_1-4: Control command 0 = Not controlled, 1 = POWER OFF, 2 = POWER ON	
	For get commands, the control output connector and control command are separated from each other by a comma. For set commands, the control output connector and control command can be specified. Up to 32 commands can be specified by separating them by a comma. By sending target parameters, the other parameters will be set to Not controlled automatically.	
Example	@GEC,7 ↵ @GEC,7,0,4096,DISPLAY1 ON, 0,1,2 ↵	Getting settings of control command 7. ・Delay time: 0ms ・Memo: DISPLAY1 ON ・Error: Stop ・OUT1 sink device: Turning on ・Other outputs: not controlled.
	@SEC,7,0,4096,DISPLAY1 ON, 0,1,2 ↵ @SEC,7,0,4096,DISPLAY1 ON, 0,1,2 ↵	Setting control command 7 as follows: ・Delay time: 0 ms. ・Memo: DISPLAY1 ON ・Error: Stop ・OUT1 sink device: Turning on ・Other outputs: not controlled.
Remarks	—	

@GRC / @SRC	**Reply command**	
Function	Getting	Setting
Format	@GRC, no ↵	@SRC, no, process, length, command, mask, memo ↵
Return value	@GRC, no, process, length, command, mask, memo ↵	@SRC, no, process, length, command, mask, memo ↵
Parameter	no: Control command number 1 to 32	
	process: 0 = Stop, 1 = Continue, 2 = Resending commands	
	length: Reply command data size (bytes) 0 to 30	
	command: Reply command data length × 2 digits with 0 to 9, A to F, a to f = 4 bit per digit (in hexadecimal)	
	mask: Mask data length × 2 digits with 0 to 9, A to F, a to f = 4 bit per digit (in hexadecimal)	
	memo: Up to 14 characters of 20 to 7D except 2C (,) from ASCII codes.	
Example	@GRC,2 ↵ @GRC,2,0,1,40,40,NG ↵	Getting settings of reply command 2: ・Processing: Stop ・Data size: 1 byte ・Command data: 40 (in hex) ・Mask data: 40 (checking the second bit from the top) ・Memo: NG (no good)
	@SRC,1,1,9, 52454356204F4B0D0A, FFFFFFFFFFFFFFFFFF,OK ↵ @SRC,1,1,9, 52454356204F4B0D0A, FFFFFFFFFFFFFFFFFF,OK ↵	Setting reply command 1 as follows: ・Processing: Continue ・Data size: 9 bytes ・Command data: RECV OK CR LF (ASCII) ・Mask data: ALL: FF (checking all bits) ・Memo: OK
Remarks	—	

@GCC / @SCC	**Control command link**	
Function	Getting	Setting
Format	@GCC, event ↵	@SCC, event, c_1 (, c_2, c_3･･･) ↵
Return value	@GCC, event, c_1 (, c_2, c_3･･･) ↵	@SCC, event, c_1 (, c_2, c_3･･･) ↵
Parameter	event: Control command execution condition For settable values, see the table below.	
	c_1-10: Send command 0 = Not link, 1 to 32 = Control command 1 to 32 Control commands registered in one of the following commands will be linked. **@GEC / @SEC Getting control command (Communication command control) (P.71),** **@GEC / @SEC Control command (Displaying received data) (P.73),** **@GEC / @SEC Control command (CEC control) (P.76)**	
Example	@GCC,1 ↵ @GCC,1,5,2,1 ↵	Getting control commands that will be executed when the MSD is turned on. In order of control command 5, 2, and 1 are executed in order.
	@SCC,1,5,2,1 ↵ @SCC,1,5,2,1 ↵	Executing in order of control command 5, 2, and 1.
Remarks	―	

Parameter of control command execution condition

Event	Execution condition	Event	Execution condition	Event	Execution condition
1	POWER ON	6	VIDEO:OUT1-IN1	22	VIDEO:OUT2-IN1
2	DISPLAY1 POWER ON	7	VIDEO:OUT1-IN2	23	VIDEO:OUT2-IN2
3	DISPLAY1 POWER OFF	8	VIDEO:OUT1-IN3	24	VIDEO:OUT2-IN3
4	DISPLAY2 POWER ON	9	VIDEO:OUT1-IN4	25	VIDEO:OUT2-IN4
5	DISPLAY2 POWER OFF	10	VIDEO:OUT1-IN5	26	VIDEO:OUT2-IN5
		11	VIDEO:OUT1-IN6	27	VIDEO:OUT2-IN6
		12	VIDEO:OUT1-IN7	28	VIDEO:OUT2-IN7
		13	VIDEO:OUT1-OFF	29	VIDEO:OUT2-OFF
		14	AUDIO:OUT1-IN1	30	AUDIO:OUT2-IN1
		15	AUDIO:OUT1-IN2	31	AUDIO:OUT2-IN2
		16	AUDIO:OUT1-IN3	32	AUDIO:OUT2-IN3
		17	AUDIO:OUT1-IN4	33	AUDIO:OUT2-IN4
		18	AUDIO:OUT1-IN5	34	AUDIO:OUT2-IN5
		19	AUDIO:OUT1-IN6	35	AUDIO:OUT2-IN6
		20	AUDIO:OUT1-IN7	36	AUDIO:OUT2-IN7
		21	AUDIO:OUT1-OFF	37	AUDIO:OUT2-OFF

@GIT / @SIT	**Ineffective time during control command execution**	
Function	Getting	Setting
Format	@GIT ↵	@SIT, time ↵
Return value	@GIT, time ↵	@SIT, time ↵
Parameter	time: Invalid time 0 = 0 second to 999999 = 999.999 seconds [Default] 0	
Example	@GIT ↵ @GIT,2000 ↵	Getting ineffective time of control command execution. Disabling operation during control command execution or 2000 ms. (2 seconds) after control command starts.
	@SIT,2000 ↵ @SIT,2000 ↵	Setting ineffective time during control command execution to 2000 ms. (2 seconds). Completed normally.
Remarks	ー	

@DEC	**Initializing registered command and association**	
Function	Setting	
Format	@DEC, no_1 (, no_2, no_3･･･) ↵	
Return value	@DEC, no_1 (, no_2, no_3･･･) ↵	
Parameter	no_1-32: Commands or links to be initialized 1 to 32: control command 1 to 32 101 to 132: reply command 1 to 32 (“1xx”: xx is the reply command number) 201 to 237: control command link 1 to 37 (“2xx”: xx is the control command execution condition) 【Reference: **@GRC / @SRC Reply command (P.77)** 】 【Reference: **@GCC / @SCC Control command (P.78)** 】	
Example	@DEC,201 ↵ @DEC,201 ↵	Initializing POWER ON link. Completed normally.
Remarks	ー	

@GTF / @STF	**Getting flashing time of sink device power switch**	
Function	Getting	Setting
Format	@GTF, switch_1 (, switch_2) ↵	@STF, switch_1, flash_1 (, switch_2, flash_2) ↵
Return value	@GTF, switch_1, flash_1 (, switch_2, flash_2) ↵	@STF, switch_1, flash_1 (, switch_2, flash_2) ↵
Parameter	switch_1-2: Switch type 0 = All switches, 1 = DISPLAY1 POWER, 2 = DISPLAY2 POWER	
	flash_1-2: Flashing time -1 = Flashes during control command execution [Default], 0 = Not flash, 1 to 1000 = Flashes for 1 second to 1000 seconds	
Example	@GTF,1 ↵ @GTF,1,-1 ↵	Getting flashing time of DISPLAY 1 POWER. The switch will be flashed during control command execution.
	@STF,1,5 ↵ @STF,1,5 ↵	Setting DISPLAY 1 POWER to flash for five seconds after control command starts. Completed normally.
Remarks	—	

3.3.14 Preset memory

@RCM	**Loading cross point memory**	
Function	Setting	
Format	@RCM, memory ↵	
Return value	@RCM, memory ↵	
Parameter	memory: cross point memory 1 to 7	
Example	@RCM,1 ↵ @RCM,1 ↵	Loading video and audio channels of cross point memory 1. Completed normally.
Remarks	—	

@SCM / @SEM	**Saving channels to cross point memory**	
Function	Overwriting	Saving settings other than channels set to Not controlled in “@GCM / @ECM Editing cross point memory”
Format	@SCM, memory (, name) ↵	@SEM, memory (, name) ↵
Return value	@SCM, memory (, name) ↵	@SEM, memory (, name) ↵
Parameter	memory: Cross point memory 1 to 7	
	name: Memory name Up to 10 characters using 20 to 7D from ASCII codes. If you do not specify memory name, only cross point settings are saved without changing the current memory name.	
Example	@SCM,2 ↵ @SCM,2 ↵	Saving the current video and audio channels to cross point memory 2 without changing the memory name.
	@SEM,2,PATTERN2 ↵ @SEM,2,PATTERN2 ↵	Saving the current video and audio channels to cross point memory 2 with the name of “PATTERN2”. Output settings that are set to Not Controlled are not saved.
Remarks	—	

@GCM / @ECM	**Editing cross point memory**	
Function	Getting	Setting
Format	@GCM, memory ↵	@ECM, memory, v_1, a_1 (, v_2, a_2) ↵
Return value	@GCM, memory, v_1, a_1 (, v_2, a_2) , name ↵	@ECM, memory, v_1, a_1 (, v_2, a_2) ↵
Parameter	memory: Cross point memory 1 to 7	
	v_1-2: Video channel a_1-2: Audio channel -1 = Not controlled [Default], 0 = OFF, 1 = IN1 to 7 = IN7	
	name: Memory name Up to 10 characters using 20 to 7D from ASCII codes. [Default] 20 (space)	
Example	@GCM,2 ↵ @GCM,2,3,3,1,1,PATTERN2 ↵	Getting video and audio channel of cross point memory 2. With the name of “PATTERN2”, OUT1: IN3; OUT2: Not controlled.
	@ECM,2,1,1,-1,-1 ↵ @ECM,2,1,1,-1,-1 ↵	When cross point memory 2 is loaded, OUT1 is set to IN1 and OUT2 is Not controlled.
Remarks	Nothing is saved in the memory by factory default, the state is “-1” (Not controlled). If you save only video (@SCV) or audio (@SCA) at the first saving of cross point settings, “-1” (Not controlled) is replied to unsaved audio and video.	

@RCV	**Loading cross point memory (setting video channel)**	
Function	Setting	
Format	@RCV, memory ↵	
Return value	@RCV, memory ↵	
Parameter	memory: Cross point memory 1 to 7	
Example	@RCV,1 ↵ @RCV,1 ↵	Loading video channel of cross point memory. Completed normally.
Remarks	—	

@SCV / @SEV	**Saving cross point memory (Setting video channel)**	
Function	Overwritten	Saving settings other than channels set to Not controlled in “@GCM / @ECM Editing cross point memory”
Format	@SCV, memory (, name) ↵	@SEV, memory (, name) ↵
Return value	@SCV, memory (, name) ↵	@SEV, memory (, name) ↵
Parameter	memory: Cross point memory 1 to 7	
	name: Memory name Up to 10 characters using 20 to 7D from ASCII codes. If you do not specify memory name, only settings of cross point are saved without changing the memory name.	
Example	@SCV,2 ↵ @SCV,2 ↵	Saving the current video channel in cross point memory 2 without changing memory name.
	@SEV,2,PATTERN2 ↵ @SEV,2,PATTERN2 ↵	Saving the current video channel in cross point memory 2 with the name of “PATTERN2”. Output settings that are set to Not Controlled are not saved.
Remarks	—	

@GCV / @ECV	**Editing cross point memory (Setting video channel)**	
Function	Getting	Setting
Format	@GCV, memory ↵	@ECV, memory, v_1 (, v_2) ↵
Return value	@GCV, memory, v_1 (, v_2) , name ↵	@ECV, memory, v_1 (, v_2) ↵
Parameter	memory: Cross point memory 1 to 7	
	v_1-2: Video channel -1 = Not controlled [Default], 0 = OFF, 1 = IN1 to 7 = IN7	
	name: Memory name Up to 10 characters using 20 to 7D from ASCII codes. [Default] 20 (space)	
Example	@GCV,2 ↵ @GCV,2,3,1,PATTERN2 ↵	Getting video channel of cross point memory 2. OUT1: IN3; OUT2: IN1 with the name of “PATTERN2”.
	@ECV,2,1,-1 ↵ @ECV,2,1,-1 ↵	When cross point memory 2 is loaded, OUT1 is set to IN1 and OUT2 is Not controlled.
Remarks	Nothing is saved in the memory by factory default, the state is “-1” (Not controlled). If you save only audio (@SCA) at the first saving of cross point settings, “-1” (Not controlled) is replied to unsaved audio and video.	

@RCA	**Loading audio channel setting from cross point memory**	
Function	Setting	
Format	@RCA, memory ↵	
Return value	@RCA, memory ↵	
Parameter	memory: Cross point memory 1 to 7	
Example	@RCA,1 ↵ @RCA,1 ↵	Loading audio channel of cross point memory 1. Completed normally.
Remarks	—	

@SCA / @SEA	**Saving cross point memory (Setting audio channel)**	
Function	Overwriting	Saving settings other than channels set to Not controlled in “@GCM / @ECM Editing cross point memory”
Format	@SCA, memory (, name) ↵	@SEA, memory (, name) ↵
Return value	@SCA, memory (, name) ↵	@SEA, memory (, name) ↵
Parameter	memory: Cross point memory 1 to 7	
	name: Memory name Up to 10 characters using 20 to 7D from ASCII codes. If you do not specify memory name, only cross point settings are saved without changing the memory name.	
Example	@SCA,2 ↵ @SCA,2 ↵	Saving the current audio channel in cross point memory 2 without changing memory name.
	@SEA,2,PATTERN2 ↵ @SEA,2,PATTERN2 ↵	Saving the current video channel in cross point memory 2 with the name of “PATTERN2”. Output settings that are set to Not Controlled are not saved.
Remarks	—	

@GCA / @ECA	**Editing cross point memory (Setting audio channel)**	
Function	Getting	Setting
Format	@GCA, memory ↵	@ECA, memory, a_1 (, a_2) ↵
Return value	@GCA, memory, a_1 (, a_2) , name ↵	@ECA, memory, a_1 (, a_2) ↵
Parameter	memory: Cross point memory 1 to 7	
	a_1-2: Audio channel -1 = Not controlled [Default], 0 = OFF, 1 = IN1 to 7 = IN7	
	name: Memory name Up to 10 characters using 20 to 7D from ASCII codes. [Default] 20 (space)	
Example	@GCA,2 ↵ @GCA,2,3,1,PATTERN2 ↵	Getting audio channel of cross point memory 2. OUT1: IN3; OUT2: IN1 with the name of "PATTERN2"
	@ECA,2,1,2 ↵ @ECA,2,1,2 ↵	When cross point memory 2 is loaded, OUT1 is set to IN1 and OUT2 is set to IN2.
Remarks	Nothing is saved in the memory by factory default, the state is "-1" (Not controlled). If you save only video (@SCV) at the first saving of cross point settings, "-1" (Not controlled) is replied to unsaved audio and video.	

@RPM / @SPM	**Saving all settings**	
Function	Setting	Saving
Format	@RPM, preset ↵	@SPM, preset (, name) ↵
Return value	@RPM, preset ↵	@SPM, preset (, name) ↵
Parameter	preset: Preset memory 1 to 8	
	name: Memory name Up to 10 characters using 20 to 7D from ASCII codes. If you do not specify memory name, only cross point settings are saved without changing the memory name.	
Example	@RPM,3 ↵ @RPM,3 ↵	Loading preset memory 3. Completed normally.
	@SPM,2 ↵ @SPM,2 ↵	Saving the current settings in preset memory 2 without changing the memory name.
	@SPM,2,MEMORY2 ↵ @SPM,2,MEMORY2 ↵	Saving the current settings in preset memory 2 with the name of "MEMORY2".
Remarks	Once preset memory is loaded, all settings of video and audio I/O except for some environmental settings will be updated.	

@GMU / @SMU	**Startup settings**	
Function	Getting	Setting
Format	@GMU ↵	@SMU, state ↵
Return value	@GMU, state ↵	@SMU, state ↵
Parameter	state: Startup settings 1 to 7 = Cross point memory 1 to 7, 8 = Channel OFF, 9 = Last channel [Default], 10 to 17 = Preset memory 1 to 8	
Example	@GMU ↵ @GMU,3 ↵	Getting settings for startup. Channel settings of cross point memory 3 will be applied at startup.
	@SMU,3 ↵ @SMU,3 ↵	Setting channel settings at startup to cross point memory 3. Completed normally.
Remarks	—	

3.3.15 Bitmap

@GBM / @SBM	**Outputting bitmap image**	
Function	Getting	Setting
Format	@GBM ↵	@SBM, ch_1, out_1 (, ch_2, out_2) ↵
Return value	@GBM, out_1 (, out_2) ↵	@SBM, ch_1, out_1 (, ch_2, out_2) ↵
Parameter	out_1-2: Outputting bitmap image 0 = OFF [Default], 1 = bitmap 1 ON, 2 = bitmap 2 ON, 3 = bitmap 3 ON, 4 = bitmap 4 ON Only registered numbers can be specified.	
	ch_1-2:output channel 0 = All outputs, 1 = OUT1, 2 = OUT2	
Example	@GBM ↵ @GBM,1,0 ↵	Getting output image. OUT1: bitmap 1; OUT2: not output a bitmap image.
	@SBM,1,1 ↵ @SBM,1,1 ↵	Outputting bitmap 1 image to OUT 1 instead of the normal image.
Remarks	―	

@GBB / @SBB	**Background color**	
Function	Getting	Setting
Format	@GBB, ch ↵	@SBB, ch_1, bitmap_1, red_1, green_1, blue_1 (, ch_2, bitmap_2, red_2, green_2, blue_2･･･) ↵
Return value	@GBB, ch, red1, green1, blue1 (, red_2, green_2, blue_2･･･) ↵	@SBB, ch_1, bitmap_1, red_1, green_1, blue_1 (, ch_2, bitmap_2, red_2, green_2, blue_2･･･) ↵
Parameter	ch: Output channel 1 = OUT1, 2 = OUT2	
	ch_1-8: Output channel 0 = All outputs, 1 = OUT1, 2 = OUT2	
	red_1-8 : Background color (Red) green_1-8 : Background color (Green) blue_1-8 : Background color (Blue) 0 to 255 [Default] 255 (White) For get commands, registered bitmap settings will be replied in order.	
	bitmap_1-8: Bitmap number 0 = all bitmaps, 1 = bitmap 1, 2 = bitmap 2, 3 = bitmap 3, 4 = bitmap 4 Only registered numbers can be specified.	
Example	@GBB,2 ↵ @GBB,2,255,0,0 ↵	Getting background color of OUT2. R: 255; G and B: 0 (Red)
	@SBB,1,1,255,255,255 ↵ @SBB,1,1,255,255,255 ↵	Setting background color for when Bitmap 1 is output to OUT1 to 255 for RGB (white). Completed normally.
Remarks	―	

@GBT / @SBT	**Aspect ratio**	
Function	Getting	Setting
Format	@GBT, ch ↵	@SBT, ch_1, bitmap_1, aspect_1 (, ch_2, bitmap_2, aspect_2･･･) ↵
Return value	@GBT, ch, aspect_1 (, aspect_2･･･) ↵	@SBT, ch_1, bitmap_1, aspect_1 (, ch_2, bitmap_2, aspect_2･･･) ↵
Parameter	ch: Output channel 1 = OUT1, 2 = OUT2	
	ch_1-8: Output channel 0 = All outputs, 1 = OUT1, 2 = OUT2	
	aspect_1-8: Aspect ratio 0 = AUTO [Default], 1 = FULL, 2 = THROUGH For get commands, registered bitmap settings will be replied in order.	
	bitmap_1-8: Bitmap number 0 = all bitmaps, 1 = bitmap 1, 2 = bitmap 2, 3 = bitmap 3, 4 = bitmap 4 Only registered numbers can be specified.	
Example	@GBT,1 ↵ @GBT,1,1 ↵	Getting aspect ratio of OUT1. Displayed on FULL screen.
	@SBT,1,1,1 ↵ @SBT,1,1,1 ↵	Setting aspect ratio of bitmap 1 that is output to OUT1 to FLL. Completed normally.
Remarks	―	

@GZP / @SZP	**Display position**	
Function	Getting	Setting
Format	@GZP, ch ↵	@SZP, ch_1, bitmap_1, position_1 (, ch_2, bitmap_2, position_2･･･) ↵
Return value	@GZP, ch, position_1 (, position_2･･･) ↵	@SZP, ch_1, bitmap_1, position_1 (, ch_2, bitmap_2, position_2･･･) ↵
Parameter	ch: Output channel 1 = OUT1, 2 = OUT2	
	ch_1-8: Output channel 0 = All outputs, 1 = OUT1, 2 = OUT2	
	position_1-8: Display position 0 = CENTER [Default], 1 = TOP-LEFT, 2 = BOTTOM-LEFT, 3 = TOP-RIGHT, 4 = BOTTOM-RIGHT For get commands, registered bitmap settings will be replied in order.	
	bitmap_1-8: Bitmap number 0 = All bitmaps, 1 = Bitmap 1, 2 = Bitmap 2, 3 = Bitmap 3, 4 = Bitmap 4 Only registered numbers can be specified.	
Example	@GZP,1 ↵ @GZP,1,1 ↵	Getting display position of OUT1. Displaying at upper left.
	@SZP,1,1,1 ↵ @SZP,1,1,1 ↵	Setting bitmap 1 to be displayed at upper left when it is output to OUT1. Completed normally.
Remarks	―	

@GBA / @SBA	**Bitmap assignment**	
Function	Getting	Setting
Format	@GBA, ch ↵	@SBA, ch_1, input_1, bitmap_1 (, ch_2, input_2, bitmap_2･･･) ↵
Return value	@GBA, ch, bitmap_1, bitmap_2, bitmap_3, bitmap_4, bitmap_5, bitmap_6, bitmap_7 ↵	@SBA, ch_1, input_1, bitmap_1 (, ch_2, input_2, bitmap_2･･･) ↵
Parameter	ch: Output channel 1 = OUT1, 2 = OUT2	
	ch_1-14: Output channel 0 = All outputs, 1 = OUT1, 2 = OUT2	
	bitmap_1-14: Assigning bitmap 0 = NONE [Default], 1 = Bitmap 1, 2 = Bitmap 2, 3 = Bitmap 3, 4 = Bitmap 4 Only registered numbers can be specified.	
	input_1-14: Input channel 0 = All inputs, 1 = IN1 to 7 = IN7	
Example	@GBA,1 ↵ @GBA,1,0,0,0,0,0,0,1 ↵	Getting OUT1 bitmap assignment. OUT1: bitmap 1 to IN7; other input channels: no bitmap is assigned.
	@SBA,1,7,1 ↵ @SBA,1,7,1 ↵	Setting OUT2: assigning bitmap 1 to IN7 (if IN7 is selected, bitmap 1 will be output.) Completed normally.
Remarks	―	

@GPB / @SPB	**Outputting bitmap at startup**	
Function	Getting	Setting
Format	@GPB ↵	@SPB, ch_1, out_1 (, ch_2, out_2) ↵
Return value	@GPB, out_1 (, out_2) ↵	@SPB, ch_1, out_1 (, ch_2, out_2) ↵
Parameter	out_1-2: Outputting bitmap image 0 = OFF [Default], 1 = Bitmap1 ON, 2 = Bitmap2 ON, 3 = Bitmap3 ON, 4 = Bitmap4 ON Only registered numbers can be specified.	
	ch_1-2: Output channel 0 = All outputs, 1 = OUT1, 2 = OUT2	
Example	@GPB ↵ @GPB,0,1 ↵	Getting bitmap output at startup. Bitmap 1 will be output to OUT2.
	@SPB,1,0 ↵ @SPB,1,0 ↵	OUT1: not output a bitmap at startup. Completed normally.
Remarks	―	

@GBD / @SBD	**Dividing bitmap memory**	
Function	Getting	Setting
Format	@GBD ↵	@SBD, num, mode (, size_1, size_2･･･) ↵
Return value	@GBD, num, block_1 (, block_2･･･) ↵	@SBD, num, mode, block_1 (, block_2･･･) ↵
Parameter	num: The number of divides 1 to 4 [Default] 1	
	block_1-4: Block size of each memory 0 to 128 [Default] 128 If the memory is divided correctly, the block size after divide will be replied.	
	mode: Divide mode 0 = AUTO, 1 = RESIZE, 2 = FORCE, 3 = Specify size If you select ”3”, set *size_1-4* below.	
	size_1-4: Block size of each memory 0 to 128 [Default] 128 1 block: 65,536 bytes; the total size of all bitmaps: 128 blocks (8,388,608 bytes or smaller) Only if you select the divide mode to “3”, specify this value.	
Example	@GBD ↵ @GBD,2,64,64 ↵	Getting dividing bitmap memory. Bitmap 1 and bitmap 2: 64 blocks (4,194,304 bytes) are allocated for each.
	@SBD,2,1 ↵ @SBD,2,1,64,64 ↵	Dividing bitmap memory into two in RESIZE mode. Bitmap 1 and bitmap 2: 64 blocks (4,194,304 bytes) are allocated for each.
Remarks	―	

@GBV	**Bitmap memory status**	
Function	Getting	
Format	@GBV ↵	
Return value	@GBV, num, block_1 (, block_2･･･) ↵	
Parameter	num: The number of divides 1 to 4 [Default] 1	
	block_1-4: Block size of each memory actually used 0 to 128 [Default] 12	
Example	@GBV ↵ @GBV,2,32,0 ↵	Getting actual state of bitmap memory. Bitmap 1: 32 blocks (2,097,152 byes) are used; bitmap 2: not registered.
Remarks	―	

@GBN / @SBN	**Bitmap number**	
Function	Getting	Setting
Format	@GBN ↵	@SBN, bitmap ↵
Return value	@GBN, bitmap ↵	@SBN, bitmap ↵
Parameter	bitmap: Bitmap number 1 = Bitmap 1 [Default], 2 = Bitmap 2, 3 = Bitmap 3, 4 = Bitmap 4 Only the number of divides or smaller value can be specified. Specify the bitmap number first if using a remote control application or the like.	
Example	@GBN ↵ @GBN,2 ↵	Getting bitmap number to be registered. Bitmap 2.
	@SBN,2 ↵ @SBN,2 ↵	Registering an image in bitmap 2. (the bitmap file to be sent next time will be registered in bitmap 2). Completed normally.
Remarks	―	

@GFZ / @SFZ	**Freeze**	
Function	Getting	Setting
Format	@GFZ ↵	@SFZ, ch_1, freeze_1 (, ch_2, freeze_2) ↵
Return value	@GFZ, freeze_1 (, freeze_2) ↵	@SFZ, ch_1, freeze_1 (, ch_2, freeze_2) ↵
Parameter	freeze_1-2: Setting freeze 0 = OFF [Default], 1 = ON	
	ch_1-2: Output channel 0 = All outputs, 1 = OUT1, 2 = OUT2	
Example	@GFZ ↵ @GFZ,1,0 ↵	Getting freeze status. OUT1: input image is frozen and output.
	@SFZ,1,1 ↵ @SFZ,1,1 ↵	Freezing OUT1 image. Completed normally.
Remarks	Images freeze temporarily. When input channel is switched or input signals are changed, the freeze is released automatically and input image is output normally.	

@CAP	**Capturing input image**	
Function	Setting	
Format	@CAP, ch, bitmap ↵	
Return value	@CAP, ch, bitmap ↵	
Parameter	ch: Output channel 1 = OUT1, 2 = OUT2	
	bitmap: Bitmap number 1 = Bitmap1, 2 = Bitmap2, 3 = Bitmap3, 4 = Bitmap4 Only the number of divides or smaller value can be specified.	
Example	@CAP,1,2 ↵ @CAP,1,2 ↵	Registering OUT1 input video in bitmap 2. Completed normally.
Remarks	―	

3.3.16 Other settings

@GLS / @SLS	**Key lock**	
Function	Getting	Setting
Format	@GLS ↵	@SLS, lock ↵
Return value	@GLS, lock ↵	@SLS, lock ↵
Parameter	lock: Key lock 0 = Releasing lock [Default], 1 = Locking, 2 = Changing the current setting	
Example	@GLS ↵ @GLS,1 ↵	Getting keylock status. Keys of front panel are locked.
	@SLS,1 ↵ @SLS,1 ↵	Locking the front panel. Completed normally.
Remarks	—	

@GLM / @SLM	**Setting target front panel keys to be locked**	
Function	Getting	Setting
Format	@GLM ↵	@SLM, channel, channel_mode, menu, power ↵
Return value	@GLM, channel, channel_mode, menu, power ↵	@SLM, channel, channel_mode, menu, power ↵
Parameter	channel : Input channel selection key channel_mode : Channel switching mode key menu : Menu operation key power : Sink device power key 0 = Not locked, 1 = Locked [Default]	
Example	@GLM ↵ @GLM,1,0,0,0 ↵	Getting setting of target keys to be locked. Only input channel selection keys are locked.
	@SLM,1,0,0,0 ↵ @SLM,1,0,0,0 ↵	Setting only input channel selection keys to be locked. Completed normally.
Remarks	—	

@GBZ / @SBZ	**Setting buzzer**	
Function	Getting	Setting
Format	@GBZ ↵	@SBZ, bz ↵
Return value	@GBZ, bz ↵	@SBZ, bz ↵
Parameter	bz: Buzzer sound 0 = OFF, 1 = ON [Default]	
Example	@GBZ ↵ @GBZ,1 ↵	Getting buzzer status. ON
	@SBZ,1 ↵ @SBZ,1 ↵	Enabling buzzer. Completed normally.
Remarks	ー	

@GSS	**Input and output status**
Function	Getting
Format	@GSS, channel, mode ↵
Return value	@GSS, channel, mode, status_1 (, status_2, status_3･･･) ↵
Parameter	channel: I/O channel 1 = IN1, 2 = IN2, 3 = IN3, 4 = IN4, 5 = IN5, 6 = IN6, 7 = IN7 11 = OUT1A, 12 = OUT1B, 13 = OUT2A, 14 = OUT2B
	mode: Getting status channel = 1 to 5 (digital input channel) 0 = All of 1 to 4, 1 = Type of input signal*1, 2 = Format of video input signal*2, 3 = Format of audio input signal*3, 4 = with/without HDCP input channel = 5 to 7 (analog input channel) 0 = All of 1 to 2, 1 = Type of input signal*1, 2 = Format of video input signal*2 channel = 11 to 14 (output channel) 0 = All of 1 to 3, 1 = HDCP authorization*4, 2 = Type of output signal*5, 3 = Error code*6

*1 For type of input signal

Value	Input signal type
Hxx	HDMI signal is input. xx stands for color depth which is 24 or 30.
D	DVI signal is input
R	Analog RGB signal is input
Y	Analog YPbPr signal is input
V	Analog composite video signal is input
S	Analog S-video signal is input
N	No signal input

@GSS	Input and output status
Parameter	

*2 For format of video input signal

Reply example	Format of video input signal
1080i 59.94Hz	SDTV/HDTV signal is input, which replies the format type and vertical synchronous frequency
800 x 600 60.00Hz	RGB signal is input, and [Horizontal resolution x Vertical resolution and vertical synchronous frequency] is replied.
NTSC	Analog composite video signal or analog S-video signal is input, which replies the format type.
56.83kHz 60.02Hz	Undetectable signal is input, which replies the horizontal and vertical synchronous frequencies.
NO SIGNAL	No video signal is input

*3 Format of audio input signals

Reply example	Format of audio input signal
LINEAR PCM 48kHz	Linear PCM signal is input, which replies the sampling frequency.
LINEAR PCM 48kHz (MULTI CHANNEL)	Multi channel linear PCM signal is input.
COMPRESSED AUDIO	Compressed audio signal (such as Dolby Digital and DTS) is input (The MSD does not recognize detailed formats. “COMPRESSED AUDIO” is sent to all compressed audios).
NO SIGNAL	No video signal is input.

*4 HDCP authorization

Reply example	HDCP authorization
HDCP SUPPORT	Device with HDCP is connected.
HDCP NOT SUPPORT	Device without HDCP is connected.
HDCP ERROR	Device with HDCP is connected, but the authorization failed.
HDCP CHECK NOW	Connection status of sink device was changed, and the status is being checked.
MONITOR DISCONNECT	Sink device is disconnected.
Cat6 LINK DISCONNECT	Cat6 / Cat5e cable is disconnected. (Only for OUT1B and OUT2B)
Cat6 NO LINK	Cat6 / Cat5e cable is not connected. (Only for OUT1B and OUT2B)
UNCONNECTED	Sink device is not connected.

@GSS	**Input and output status**
Parameter	

*5 Type of output signals

Reply example	Type of output signals
Hxx	HDMI signal is output. xx stands for the color depth, 24 or 30.
D	DVI signal is input.
C	HDCP is being authorized. No video is output.
N	No sink device is connected.
O	No twisted pair cable is connected.

*6 One of the following error codes is replied in the following order: HDMI output connector / video output to HDBaseT output connector, HDMI output connector / audio output to HDBaseT output connector, audio output to analog audio output connector.

Error code	Video output status	Audio output status
0	Video or audio is output correctly.*7	
1	"**@GVO / @SVO Video output connector**" is set to "OFF".	"**@GAM / @SAM Audio output mute**" is set to "ON".
2	Only replied if digital input, which means DDC power is not input. (Normally, if input device is not connected, this error code is displayed)	
3	Video signal is not input	Audio signal is not input
4	Only replied if digital input, which means video or audio output of the source device is muted	
5	Only replied if digital input, which means signal with HDCP is input but sink device is HDCP incompliant (This error code may be also replied during HDCP authorization)	
6	Only replied if digital input, which means source device does not output the required information (packets) for output of video or audio	
7	Signal that is not supported by MSD series (dot clock is out of range) is input.	Since compressed audio is input, audio cannot be output (Compressed audio can be output only to sink devices supporting compressed audio).
8	–	**"@GDO / @SDOAudio output connector"** is set to "OFF".
9	–	**"@GDM / @SDMOutput mode"** is set to "DVI MODE" or a sink device that does not support audio is connected.*8

<table>
<tr><th>@GSS</th><th>Input and output status</th></tr>
<tr><td>Parameter</td><td>
<table>
<tr><th>Error code</th><th>Video output status</th><th>Audio output status</th></tr>
<tr><td>A</td><td colspan="2">Input channel is set to “OFF”
@GSW / @SSW, @GSV / @SSV, @GSA / @SSA</td></tr>
<tr><td>B</td><td>－</td><td>is set to “OFF”.</td></tr>
<tr><td>C</td><td colspan="2">Sink device is not connected.*8</td></tr>
<tr><td>D</td><td colspan="2">HDCP is being authorized.*8</td></tr>
<tr><td>E</td><td colspan="2">HDCP authorization failed.*8</td></tr>
<tr><td>F</td><td colspan="2">Twisted pair cable is not connected.</td></tr>
</table>
*7 Analog audio input status cannot be detected. Even if “0” is replied, audio may not be output with analog input selected.
*8 Only statuses of HDMI output connector / HDBaseT output connector.
</td></tr>
<tr><td>Example</td><td>@GSS,1,0 ↵
@GSS,1,0,H30,1080P 60Hz,
LINEAR PCM 48kHz, HDCP ON ↵

Getting IN1 all statuses.
・Type of input signal: 30-BIT COLOR HDMI signal
・Video input signal: 1080P 60Hz
・Audio input signal: LINEAR PCM 48kHz
・HDCP:ON</td></tr>
<tr><td>Remarks</td><td>－</td></tr>
</table>

@GES	**Monitor's EDID information**	
Function	Getting	
Format	@GES, channel, mode ↵	
Return value	@GES, channel, mode, status_1 (, status_2, status_3・・・) ↵	
Parameter	channel: Output connector 1 = OUT1A, 2 = OUT1B, 3 = OUT2A, 4 = OUT2B	
	mode: Getting statuses 0 = All of 1 to 4, 1 = Monitor name, 2 = Resolution and dot clock, 3 = HDMI support status, sampling structure, and color depth *1, 4 = Audio support status and sampling frequency, bit length, the number of channels, and support status of compressed audio 2 *1 For sink device that does not support HDMI, "DVI" is replied. For sink device that supports HDMI, "HDMI" is replied, and then supported sampling structures (RGB, YCbCr 4:2:2, YCbCr 4:4:4) and supported color depths (24, 30, 36) are replied in that order. *2 For sink device that does not support audio, "AUDIO NOT SUPPORT" is replied. For sink device that supports audio, "LINEAR PCM" is replied, and then supported sampling frequencies (32, 44.1, 48, 88.2, 96, 176.4, and 192), bit length (16, 20, and 24), the number of channels (one of 1 to 8), and "COMPRESSED AUDIO SUPPORT" (if compressed audio is supported) are replied in that order.	
Example	@GES,1,0 ↵ @GES,1,0,MSD-501, 1920x1080 148.50MHz,DVI,AUDIO NOT SUPPORT ↵	Getting EDID information of the sink device connected to OUT1A. ・Monitor name: MSD-501 ・Resolution: 1920x1080 ・Dot clock: 148.50MHz ・HDMI: Not supported ・Audio: Not supported
Remarks	―	

@GIV	**Version**	
Function	Getting	
Format	@GIV ↵	
Return value	@GIV, id, ver ↵	
Parameter	id : Model number ver : Firmware version	
Example	@GIV ↵ @GIV,MSD-501,1.00 ↵	Getting product information. Model number and firmware version are replied.
Remarks	―	

MSD-701 / 702 User's guide (Command Guide)

Ver.1.0.1

Revised on: 30 October 2015

Headquarters IDK Corporation
7-9-1 Chuo, Yamato-shi, Kanagawa-pref.
242-0021 JAPAN
TEL: +81-46-200-0764 FAX: +81-46-200-0765
Email: idk_eng@idk.co.jp URL: http: //www.idk.co.jp/en/index.html

USA IDK America Inc.
72 Grays Bridge Road Suite 1-C, Brookfield, CT 06804
TEL: +1-203-204-2445
Email: info@idkav.com URL: http: //www.idkav.com

Europe IDK Europe GmbH
Lise-Meitner-Str. 6, D-40878 Ratingen

Product information Support Arvanics Corporation
3-8-3-3F Yamato Higashi, Yamato-shi, Kanagawa-pref.
242-0017 JAPAN
TEL: +81-46-259-6920 FAX: +81-46-259-6930
Email: info@arvanics.com URL: http: //www.arvanics.com